Designed In USA.

HEAVY DUTY SYSTEMS

ELECTRIC COOKING EQUIPMENT



PERFORMANCE.
DURABILITY.
VALUE.

HDS
HEAVY DUTY SYSTEMS

www.heavydutysystems.com

sales@heavydutysystems.com

Electric Range with Oven



HDSER-36

STANDARD FEATURES

- Stainless steel front and sides
- Electric hotplate, 2.6kw and 2kw combination
  - Half of the hotplate are 2.6kw, half of the hotplate are 2kw
- Thermostat (122- 500°F / 50 - 260 °C) controlled oven
- Spacious static oven cavity
- Top and bottom heating elements
- Welded frame structure for best stability
- Separate controls on the oven
- Adjustable heavy duty legs
- A pull-out baffle plate with angled handle in the front
- Stainless steel oven door with good insulation
- Stainless steel handle for bottom oven
- Kick plate at the bottom for easy access for servicing

- **Thermostats (if applicable) available in either Fahrenheit or Celsius**
- **Available in various electrical power setups (power setups available for all areas of the world)**
- **Power may vary based on specified electrical setup**

Electric Range with Oven

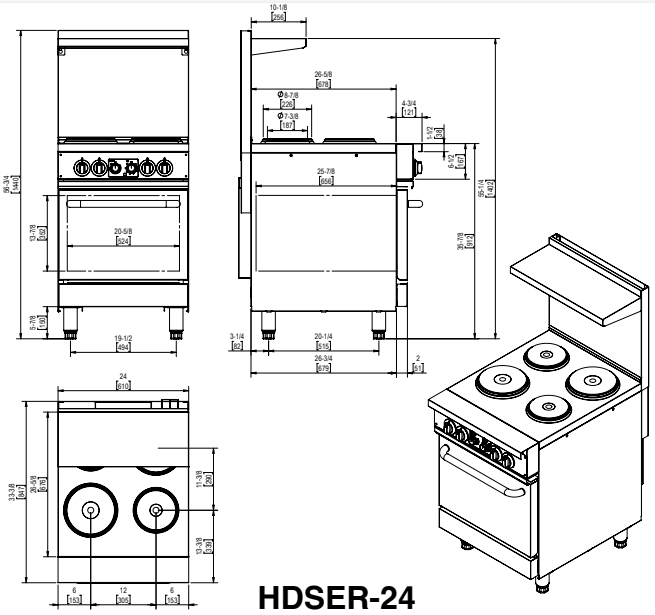

HDSER-24

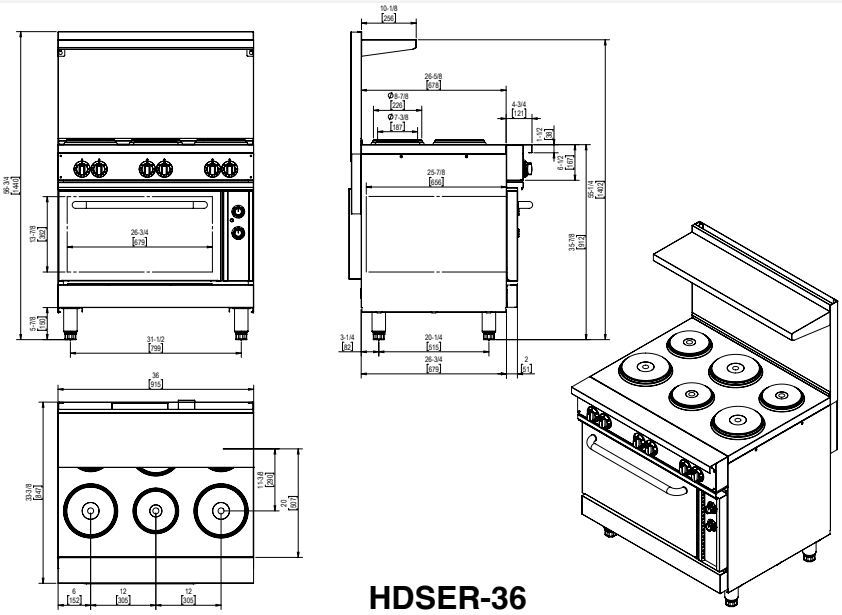

HDSER-36

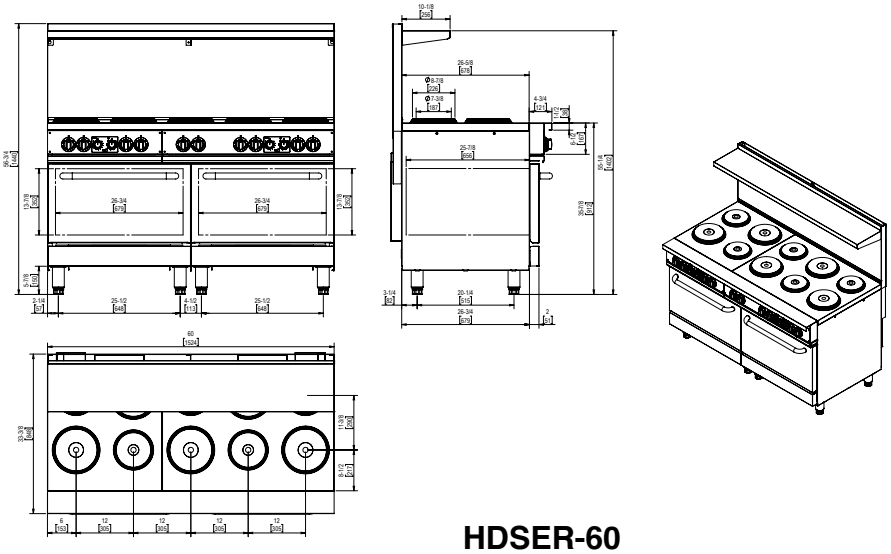

HDSER-60

MODEL	PRODUCT (WxDxH)	POWER	OVEN DIMENSION	NW
HDSER-24	610 x 848 x 1440 mm 24 x 33.4 x 56.7 inch	13.6 kW	20.5 x 25.8 x 13.9 inch	132 kg 291 lbs
HDSER-36	915 x 848 x 1440 mm 36 x 33.4 x 56.7 inch	18.2 kW	26.5 x 25.8 x 13.9 inch	167 kg 368 lbs
HDSER-60	1524 x 848 x 1440 mm 60 x 33.4 x 56.7 inch	31.8 kW	26.6 x 25.8 x 13.9 inch	280 kg 617 lbs

sales@heavydutysystems.com

All electric cooking equipment is supplied with a cord and plug.

Electric Range with Convection Oven



HDSER-36C

STANDARD FEATURES

- Stainless steel front and sides
- Electric hotplate, 2.6kw and 2kw combination
  - Half of the hotplate are 2.6kw, half of the hotplate are 2kw
- Thermostat (122- 500°F / 50 - 260 °C) controlled oven
- Cooling switch to reduce cavity temperature quickly
- Double circulating fans to ensure temperature evenness
- Welded frame structure for best stability
- Three groups of heating element in the oven
- Adjustable heavy duty legs
- A pull-out baffle plate with angled handle in the front
- Stainless steel oven door with good insulation
- Stainless steel handle for bottom oven
- Kick plate at the bottom for easy access for servicing

- **Thermostats (if applicable) available in either Fahrenheit or Celsius**
- **Available in various electrical power setups (power setups available for all areas of the world)**
- **Power may vary based on specified electrical setup**

Electric Range with Convection Oven

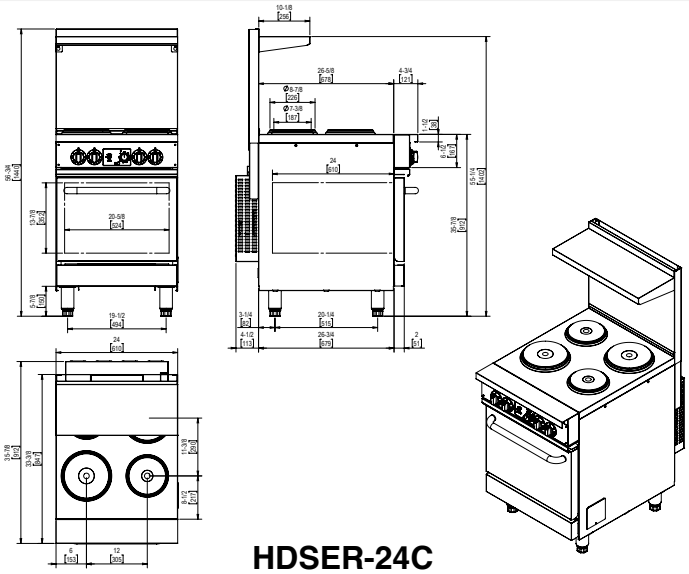

HDSER-24C

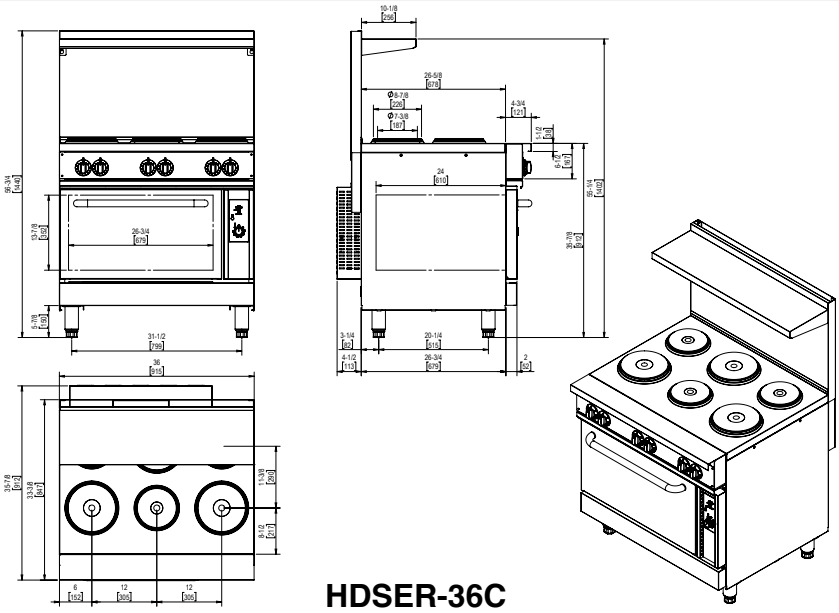

HDSER-36C

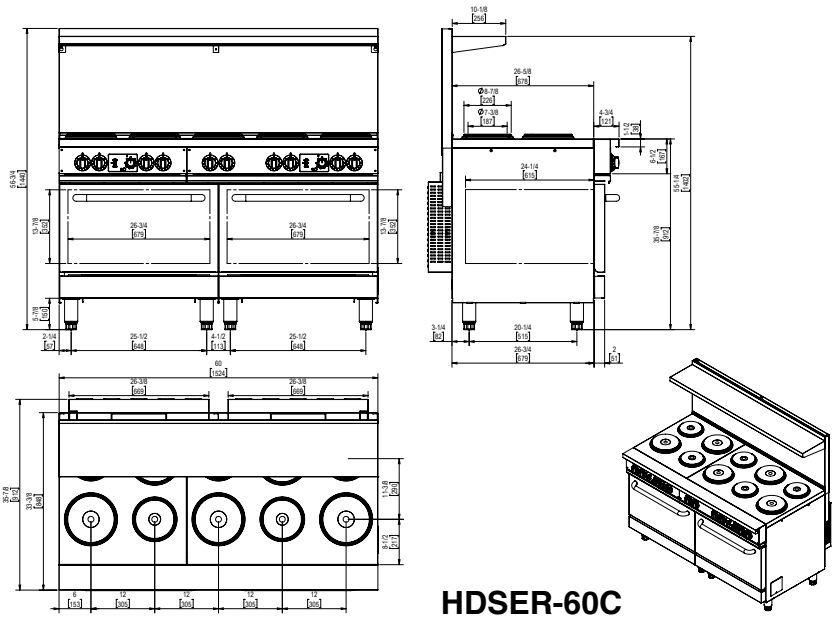

HDSER-60C

MODEL	PRODUCT (WxDxH)	POWER	OVEN DIMENSION	NW
HDSER-24C	610 x 912 x 1440 mm 24 x 35.9 x 56.7 inch	13.6 kW	20.5 x 25.8 x 13.9 inch	132 kg 291 lbs
HDSER-36C	915 x 912 x 1440 mm 36 x 35.9 x 56.7 inch	18.2 kW	26.5 x 25.8 x 13.9 inch	167 kg 368 lbs
HDSER-60C	1524 x 912 x 1440 mm 60 x 35.9 x 56.7 inch	31.8 kW	26.6 x 25.8 x 13.9 inch	280 kg 617 lbs

sales@heavydutysystems.com

All electric cooking equipment is supplied with a cord and plug.

Electric Griddle



HDSCG-24E

STANDARD FEATURES

- Stainless steel front and sides
- Stainless steel heating elements
- To be controlled every 12 “
- EGO thermostat, temperature range 122~572°F (50~300 °C)
- 3/4 “ thickness polished griddle plate
- Adjustable heavy duty legs
- Grease through channel in the front
- Stainless steel oil collector in the bottom
- Stainless steel splash guard at 3 sides

- **Thermostats (if applicable) available in either Fahrenheit or Celsius**
- **Available in various electrical power setups (power setups available for all areas of the world)**
- **Power may vary based on specified electrical setup**

Electric Griddle

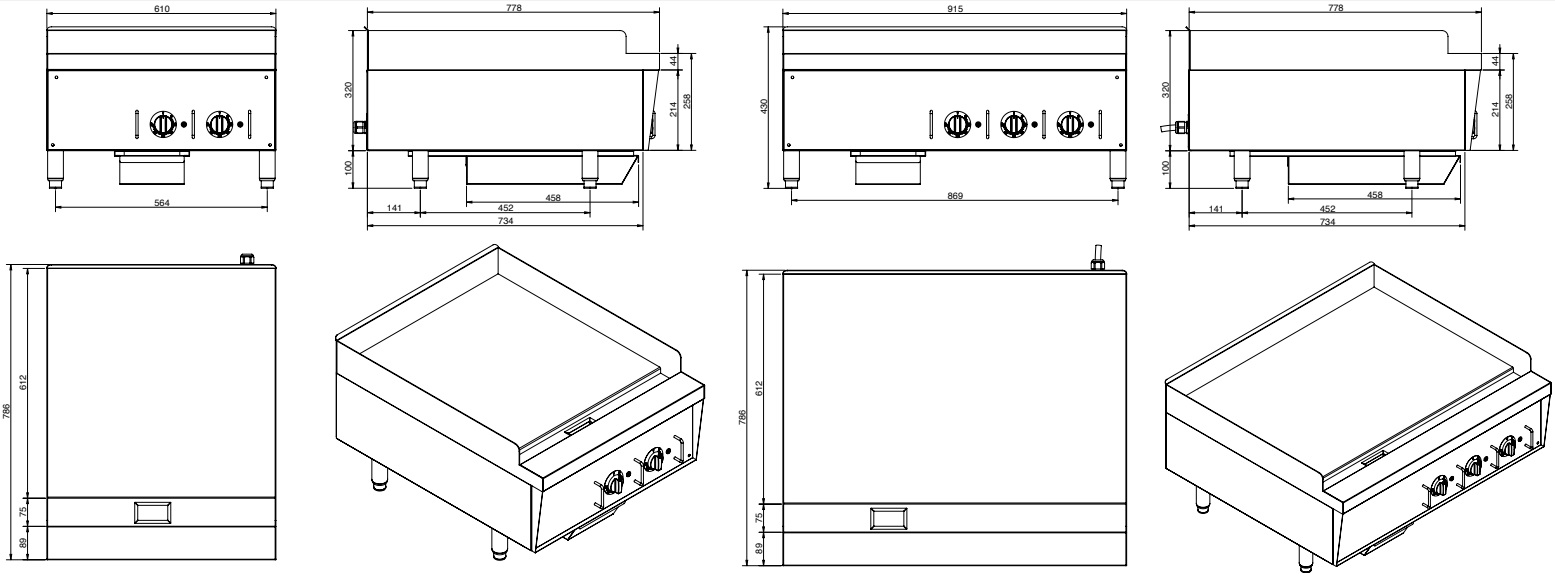

HDSCG-24E

HDSCG-36E

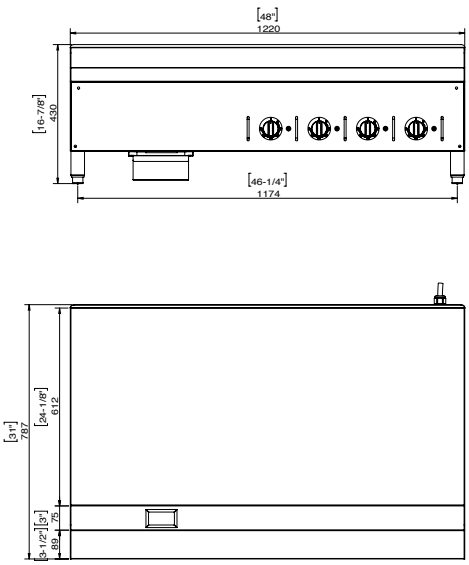

HDSCG-48E

MODEL	PRODUCT (WxDxH)	POWER	CONTROL	COOKING DIMENSION	NW
HDSCG-24E	610 x 786 x 420 mm 24 x 30.9 x 16.5 inch	8 kW	2	610 x 610 mm 24 x 24 in	92
HDSCG-36E	915 x 786 x 420 mm 36 x 30.9 x 16.5 inch	12 kW	3	915 x 610 mm 36 x 24 in	129
HDSCG-48E	1220 x 786 x 420 mm 48 x 30.9 x 16.5 inch	16 kW	4	1220 x 610 mm 48 x 24 in	169

sales@heavydutysystems.com

All electric cooking equipment is supplied with a cord and plug.

Countertop Electric Fryer



HDSEF-11L



HDSEF-11L-2

STANDARD FEATURES

- Compact design, available in 8 models
- Stainless steel structure
- Thermostat 50-190°C (122-374°F)
- Stainless steel tank with oil level
- Micro-switch for safety of operators
- Heater would stop automatically once heater is lifted up
- Stainless steel night cover with Bakelite handle, cool to touch
- Wire mesh net to collect fried crumbs from food and protect heater
- Power and heating indicators
- Nickel coating basket
- Heavy duty anti-slip rubber feet
- Electric box can be removed for easy cleaning 230°C (446°F) hi-limiter ensures safety operation

- **Thermostats (if applicable) available in either Fahrenheit or Celsius**
- **Available in various electrical power setups (power setups available for all areas of the world)**
- **Power may vary based on specified electrical setup**

Countertop Electric Fryer

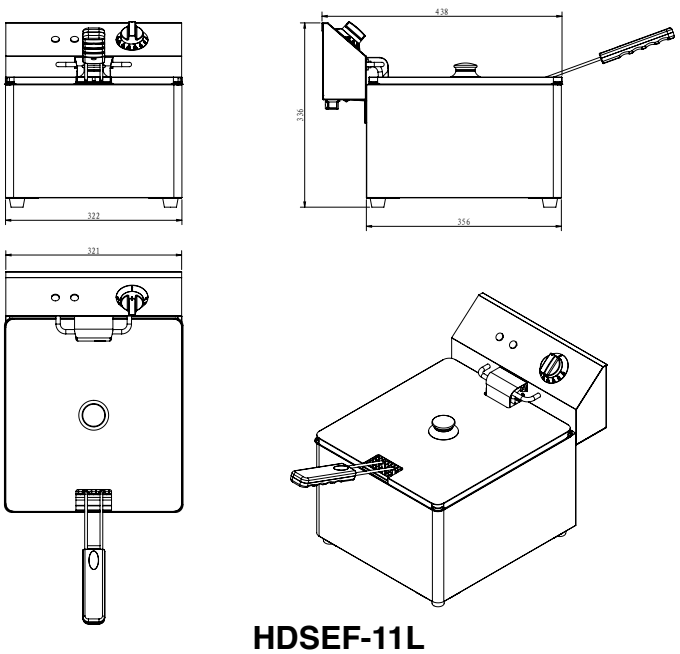

HDSEF-11L

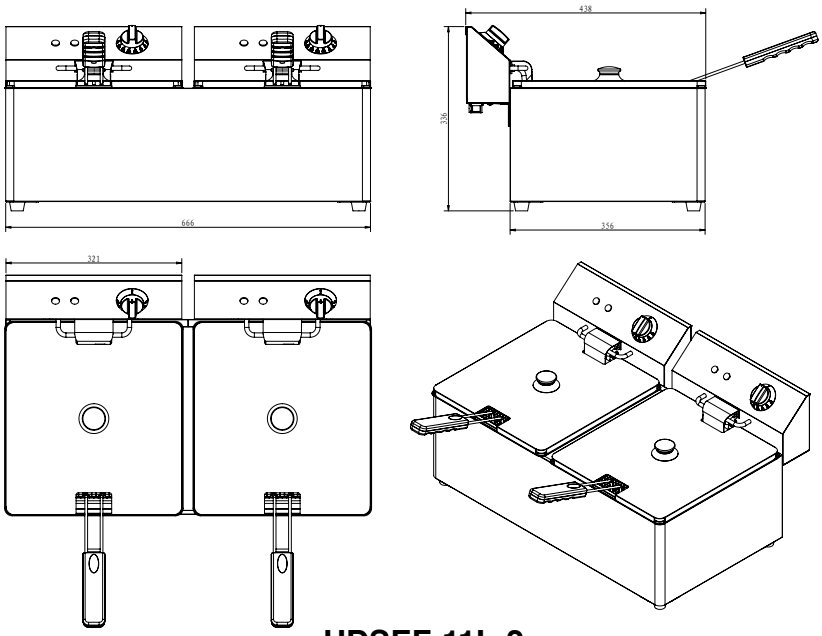

HDSEF-11L-2

MODEL	PRODUCT (WxDxH)	POWER AT 120V	POWER AT 220–240V	FRY BASKETS	CAPACITY	NW
HDSEF-4L	217 x 400 x 320 mm 9 x 16 x 13 inch	1700 W	2000 W	1	4 L	6 kg 13 lbs
HDSEF-6L	265 x 430 x 295 mm 10 x 17 x 12 inch	1700 W	2500 W	1	6 L	7 kg 15 lbs
HDSEF-8L	265 x 430 x 345 mm 10 x 17 x 14 inch	1700 W	3250 W	1	8 L	8 kg 18 lbs
HDSEF-11L	325 x 460 x 345 mm 13 x 18 x 14 inch	1700 W	3500 W	1	11 L	9 kg 20 lbs
HDSEF-4L-2	435 x 400 x 320 mm 17 x 16 x 13 inch	2 x 1700 W	2 x 2000 W	2	2 x 4 L	10 kg 22 lbs
HDSEF-6L-2	550 x 430 x 295 mm 22 x 17 x 12 inch	2 x 1700 W	2 x 2500 W	2	2 x 6 L	11 kg 24 lbs
HDSEF-8L-2	550 x 430 x 345 mm 22 x 17 x 14 inch	2 x 1700 W	2 x 3250 W	2	2 x 8 L	14 kg 31 lbs
HDSEF-11L-2	670 x 460 x 345 mm 26 x 18 x 14 inch	2 x 1700 W	2 x 3500 W	2	2 x 11 L	17 kg 37 lbs

sales@heavydutysystems.com

All electric cooking equipment is supplied with a cord and plug.

Electric Counter Top Fryer With Drain



HDSEF-8L-T



HDSEF-8L-2-T

STANDARD FEATURES

- 3250W powerful heater with 8 Litres oil capacity
- Stainless steel structure with drain tap
- Thermostat 50-190°C (122~374 °F)
- Stainless steel tank with oil level
- Micro-switch for safety of operators. Heater would stop automatically once heater is liftedup
- Stainless steel night cover with Bakelite handle, cool to touc
- Wire mesh to collect fried crumbs from food
- Water-proof on/off switch
- Power and heating indictors
- Nickel coating basket with Bakelite handle
- Available in single tank and double tanks

- **Thermostats (if applicable) available in either Fahrenheit or Celsius**
- **Available in various electrical power setups (power setups available for all areas of the world)**
- **Power may vary based on specified electrical setup**

Electric Counter Top Fryer With Drain

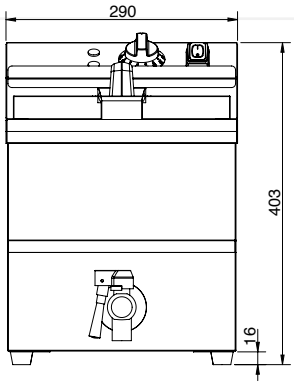

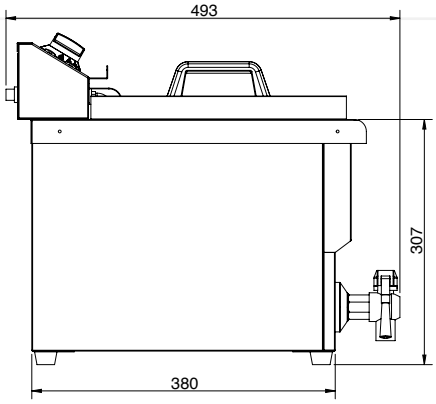

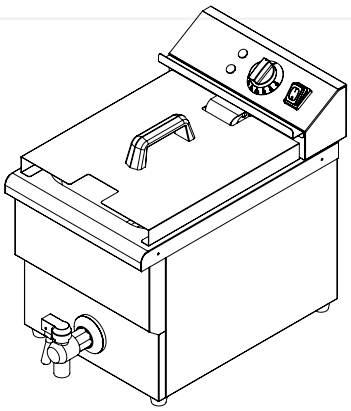

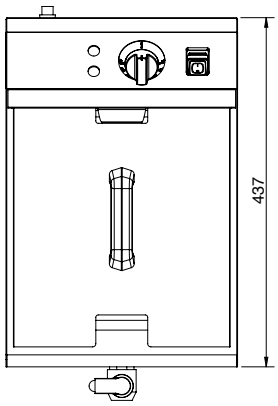

HDSEF-8L-T

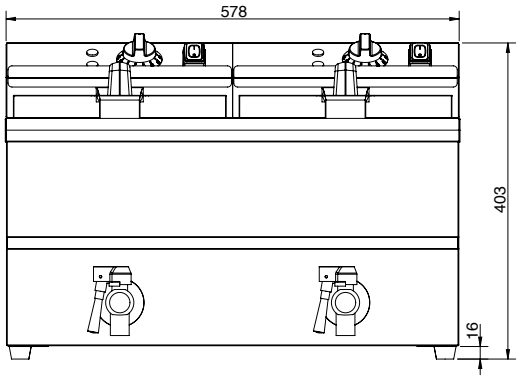

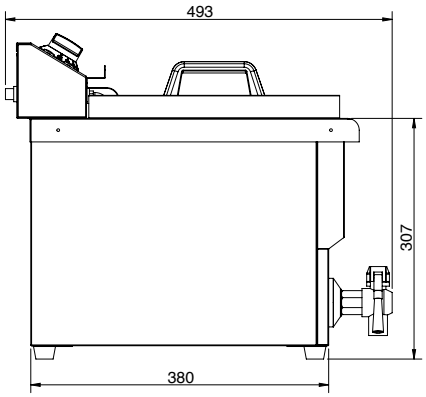

HDSEF-8L-2-T

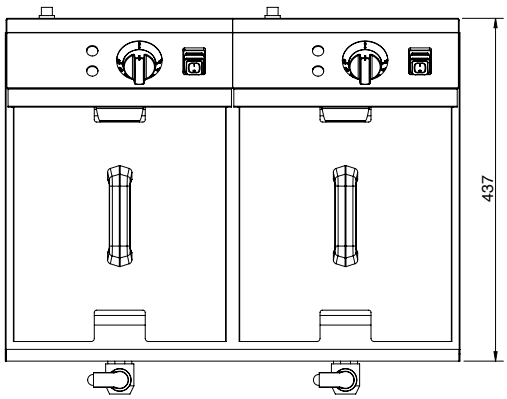

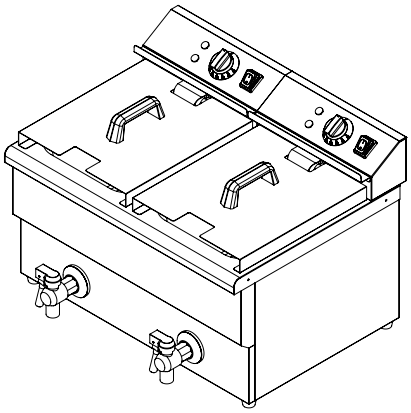

MODEL	PRODUCT (WxDxH)	POWER	FRY BASKETS	CAPACITY	NW
HDSEF-8L-T	290 x 550 x 410 mm 11.4 x 21.7 x 16.1 inch	3250 W	1	8 L	10 kg
HDSEF-8L-2-T	580 x 550 x 410 mm 22.8 x 21.7 x 16.1 inch	2 x 3250W	2	8 L + 8 L	11 kg

sales@heavydutysystems.com

All electric cooking equipment is supplied with a cord and plug.

Electric Fryer (Ribbon Heating Element)



HDSEFF-40



STANDARD FEATURES

- Stainless steel frying pot, 40 pounds capacity
- Stainless steel front and sides
- EGO thermostat, temperature range 120~374°F (49~190°C)
- On/off power switch
- 14kw flat heating elements for best heat transfer
- Deep cold zone with forward sloping bottom
- 1 inch drainage valve
- Oil draining extension
- Cool to touch Bakelite door handle
- Two baskets

- **Thermostats (if applicable) available in either Fahrenheit or Celsius**
- **Available in various electrical power setups (power setups available for all areas of the world)**
- **Power may vary based on specified electrical setup**

Electric Fryer (Ribbon Heating Element)

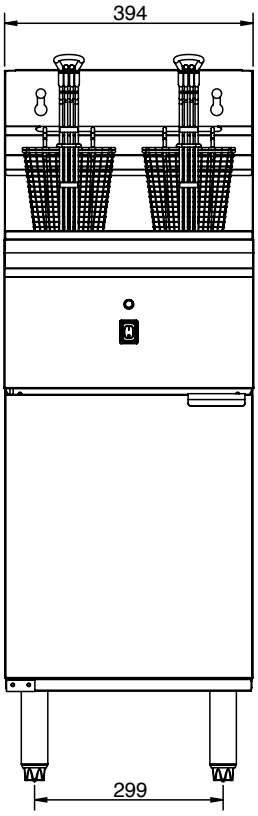

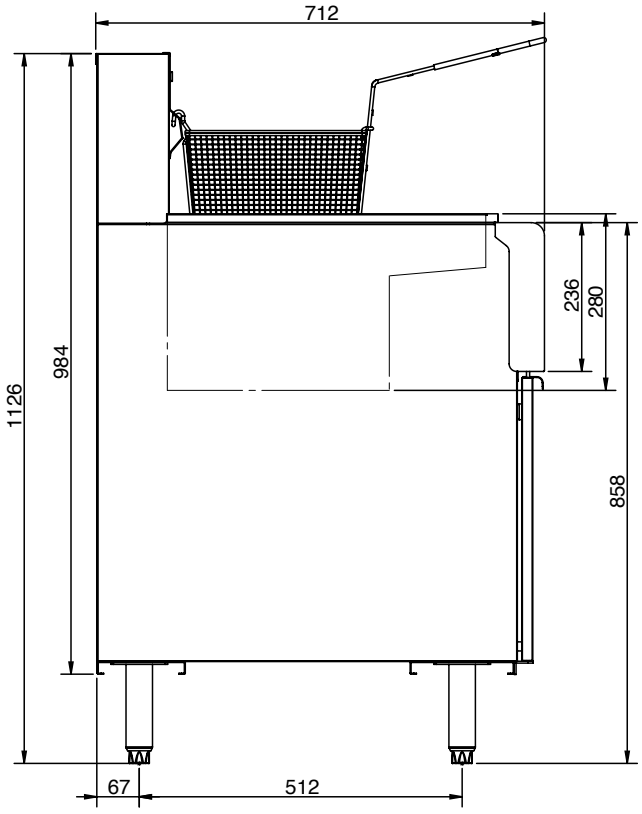

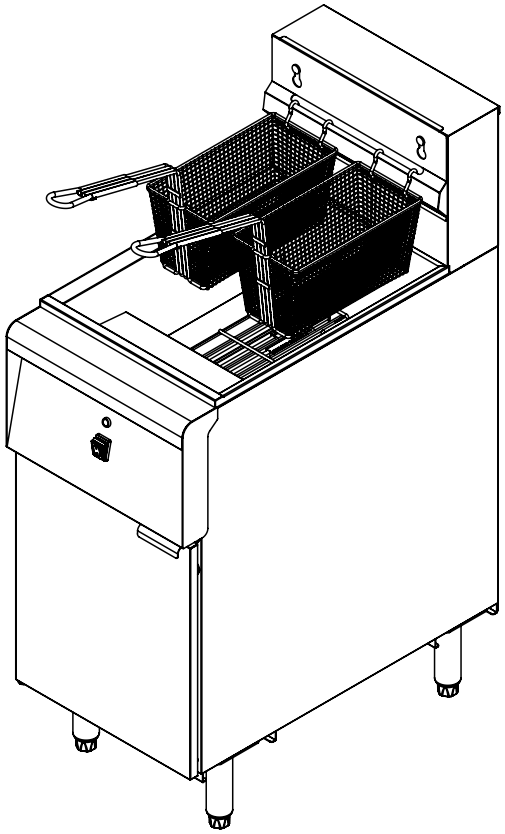

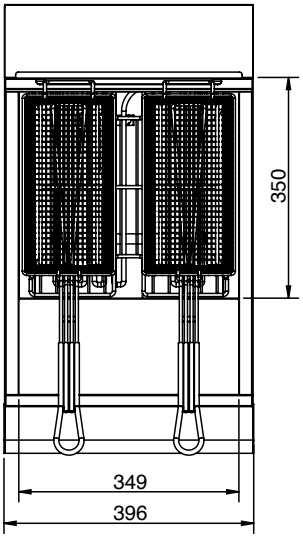

HDSEFF-40

MODEL	PRODUCT (WxDxH)	POWER	FRY BASKETS	CAPACITY	NW
HDSEFF-40	394 x 712 x 1126 mm 15.5 x 28 x 44.3 inch	14 kW	2	20 L 40 Lbs	56 kg 123 lbs

sales@heavydutysystems.com

All electric cooking equipment is supplied with a cord and plug.

Electric Fryer (Round Heating Element)



HDSEFF-28L



HDSEFF-28L-2



STANDARD FEATURES

- 18KW powerful heater with 28 Liters oil capacity each
- Robust structure with drain tap
- Thermostat 50-190ºC (122-374ºF)
- 230ºC (446ºF) hi-limiter ensures safety operation
- Stainless steel tank with oil level
- Stainless steel night cover with Bakelite handle, cool to touch
- Wire mesh net to collect fried crumbs from food and protect heater
- Heater lifting mechanism to make cleaning easy and comfortable
- Power and heating indicators
- Nickel coating basket
- Heavy duty steel foot
- Timing relay with buzzer for reminder
- Bottom cold zone to prevent food debris scorching

- **Thermostats (if applicable) available in either Fahrenheit or Celsius**
- **Available in various electrical power setups (power setups available for all areas of the world)**
- **Power may vary based on specified electrical setup**

Electric Fryer (Round Heating Element)

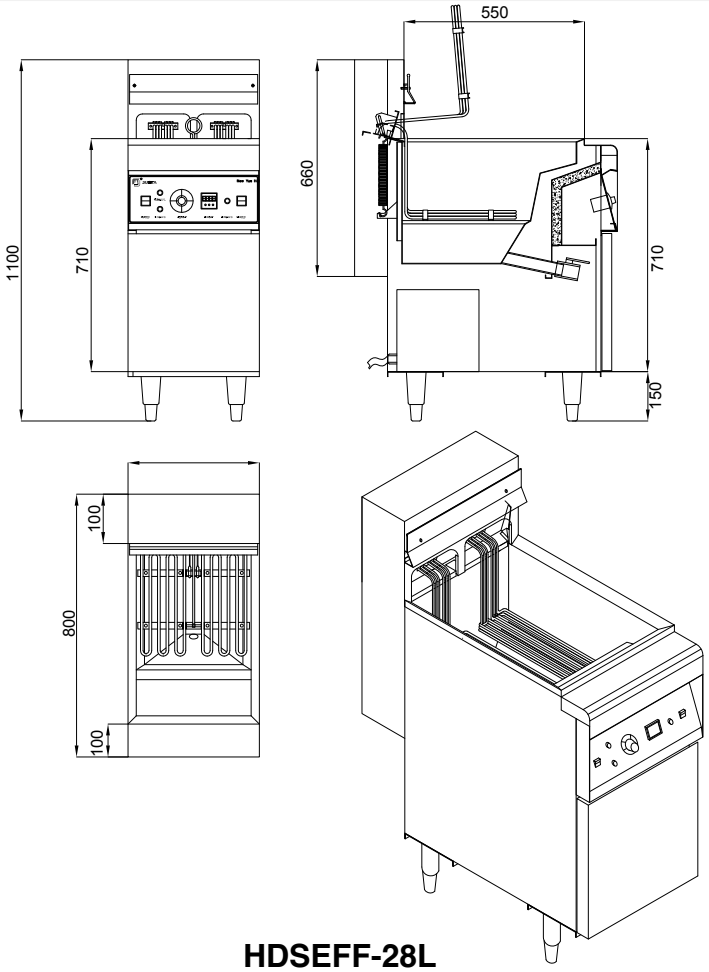

HDSEFF-28L

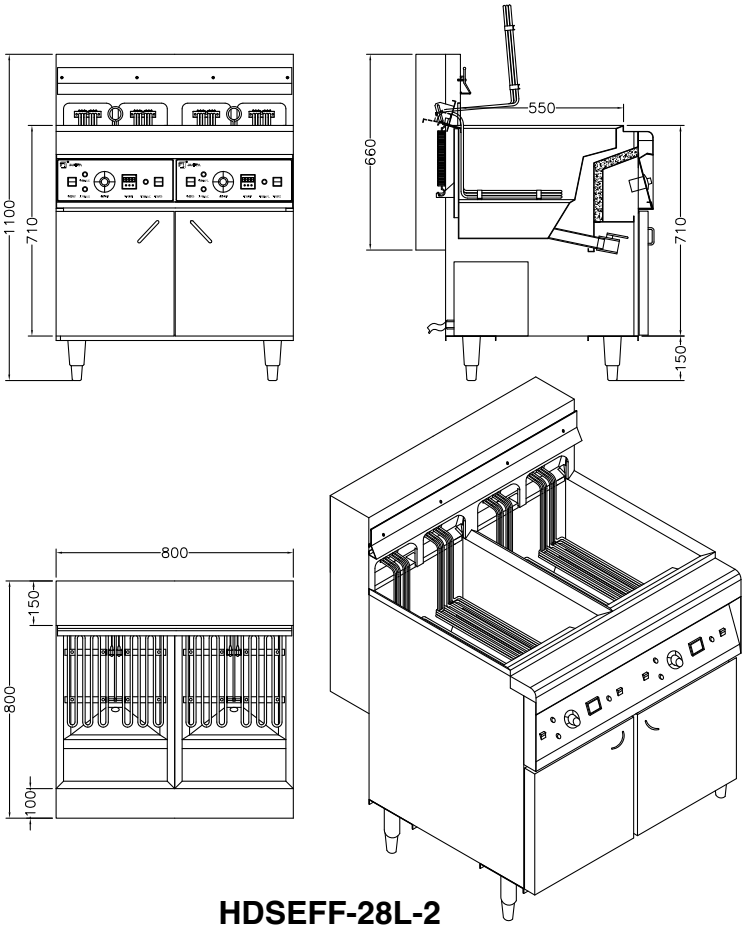

HDSEFF-28L-2

MODEL	PRODUCT (WxDxH)	POWER	FRY BASKETS	CAPACITY	NW
HDSEFF-28L	400 x 800 x 1100 mm 16 x 32 x 43 inch	18kW	2	28 L	56 kg 123 lbs
HDSEFF-28L-2	800 x 800 x 1100 mm 32 x 42 x 43 inch	2 x 18 kW	4	2 x 28 L	101 kg 222 lbs

sales@heavydutysystems.com

All electric cooking equipment is supplied with a cord and plug.

Electric Fryer – Computer Control



HDSEFF-28L-C



STANDARD FEATURES

- 18KW powerful heater with 28 Litres oil capacity each PCB control with programming function
- Preset melting function at 82ºC (180ºF)
- Robust structure with drain tap
- Temperature range is 50-190ºC (122-374ºF)
- Precise timing setting
- Round Heating Element
- 230ºC (446ºF) hi-limit ensures safety operation
- Stainless steel tank with oil level
- Stainless steel night cover with Bakelite handle, cool to touch
- Wire mesh net to collect fried crumbs from food and protect heater
- Heater lifting mechanism to make cleaning easy and comfortable
- Power and heating indicators
- Nickel coating basket
- Heavy duty steel foot
- Bottom cold zone to prevent food debris scorching

- **Thermostats (if applicable) available in either Fahrenheit or Celsius**
- **Available in various electrical power setups (power setups available for all areas of the world)**
- **Power may vary based on specified electrical setup**

Electric Fryer – Computer Control

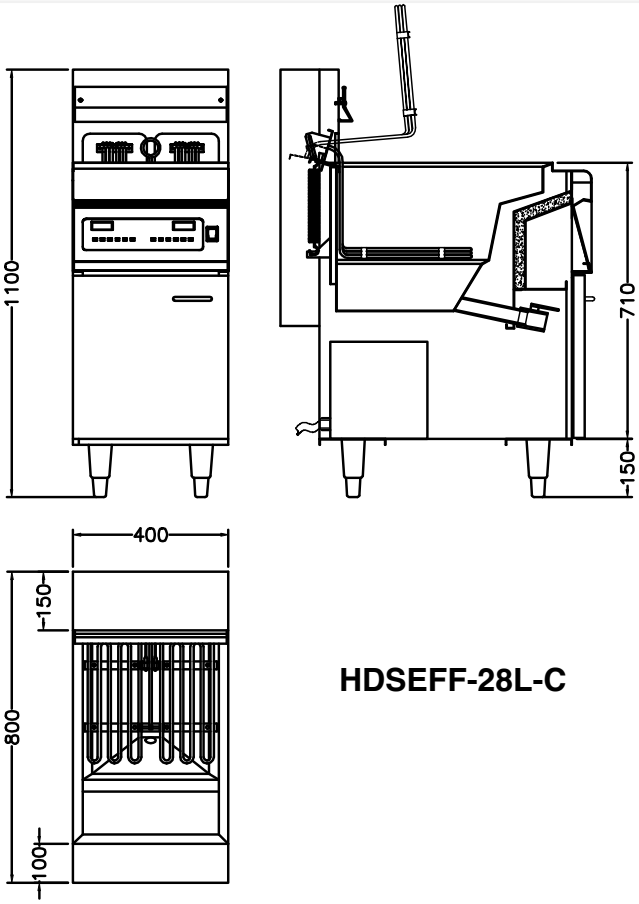

HDSEFF-28L-C

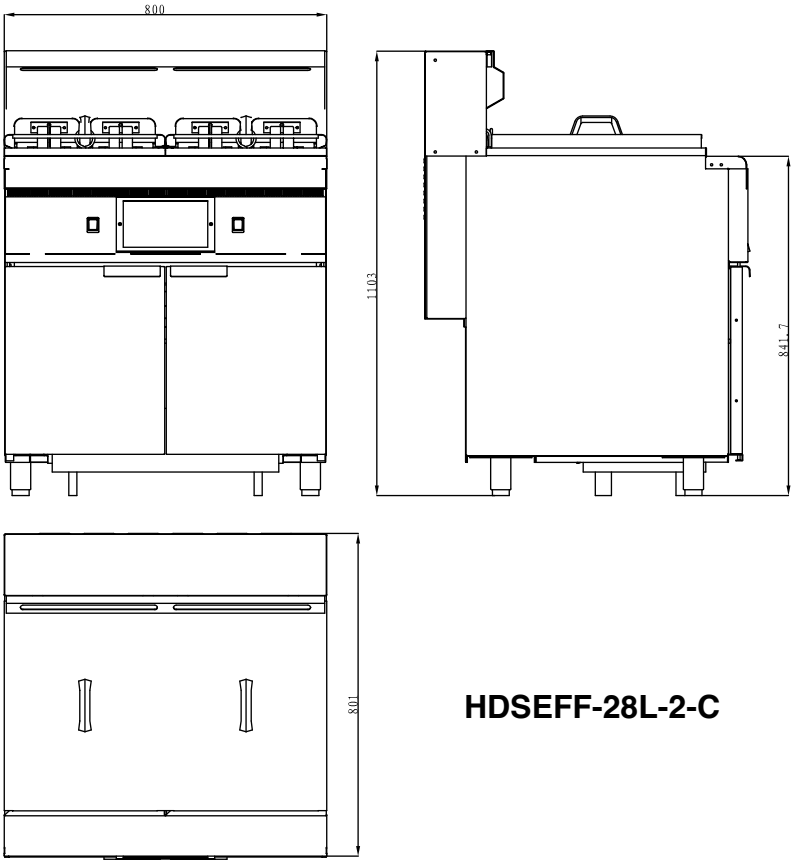

HDSEFF-28L-2-C

MODEL	PRODUCT (WxDxH)	POWER	FRY BASKETS	CAPACITY	NW
HDSEFF-28L-C	400 x 800 x 1100 mm 16 x 32 x 43 inch	18kW	2	28 L	56 kg 123 lbs
HDSEFF-28L-2-C	800 x 800 x 1100 mm 32 x 42 x 43 inch	2 x 18 kW	4	2 x 28 L	101 kg 222 lbs

sales@heavydutysystems.com

All electric cooking equipment is supplied with a cord and plug.

Electric Fryer – Split Tank



HDSEFF-10LS



STANDARD FEATURES

- 6KW powerful heater with 10 Liters oil capacity each
- Split tank with separate control system
- Robust structure with drain tap
- Thermostat 50-190ºC (122-374ºF)
- Round Heating Element
- 230ºC (446ºF) hi-limiter ensures safety operation
- Stainless steel tank with oil level
- Stainless steel night cover with Bakelite handle, cool to touch
- Wire mesh net to collect fried crumbs from food and protect heater
- Heater lifting mechanism to make cleaning easy and comfortable
- Power and heating indicators
- Nickel coating basket
- Heavy duty steel foot
- Bottom cold zone to prevent food debris scorching

- **Thermostats (if applicable) available in either Fahrenheit or Celsius**
- **Available in various electrical power setups (power setups available for all areas of the world)**
- **Power may vary based on specified electrical setup**

Electric Fryer – Split Tank

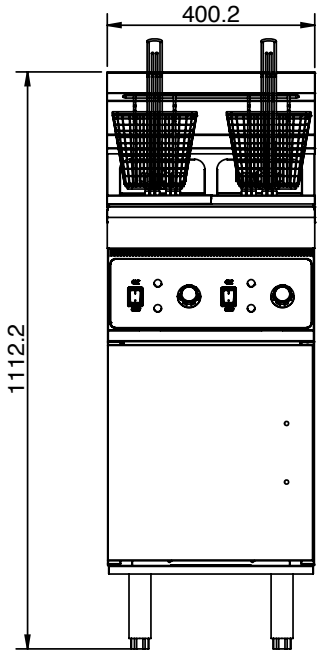

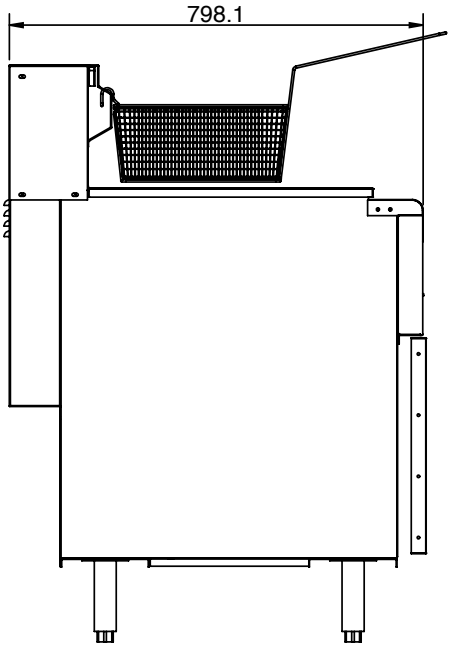

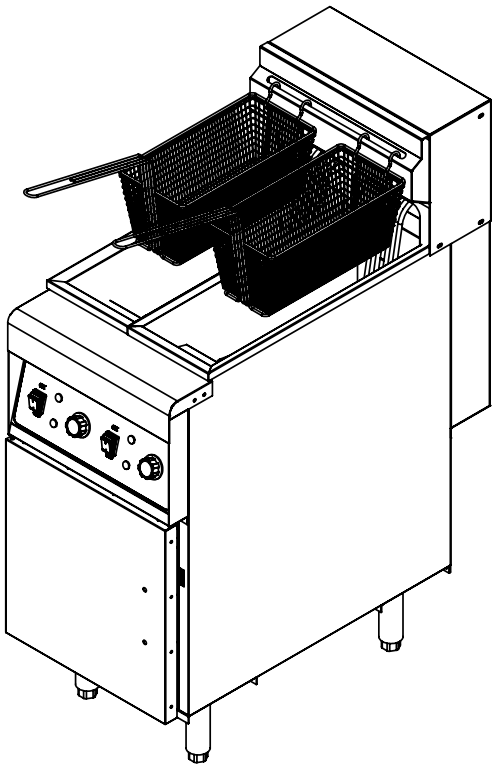

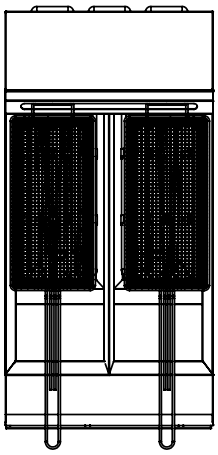

HDSEFF-10LS

MODEL	PRODUCT (WxDxH)	POWER	FRY BASKETS	CAPACITY	NW
HDSEFF-10LS	400 x 800 x 1100 mm 16 x 32 x 43 inch	6 + 6 kW	2	2 x 10 L	56 kg 123 lbs

sales@heavydutysystems.com

All electric cooking equipment is supplied with a cord and plug.

Electrical Food Warmer



HDSEFW
(Unit Does Not Come with Fry Baskets)

STANDARD FEATURES

- Stainless steel structure
- Stainless steel sheathed heating elements on top
- Heating elements for even heat distribution compared with lamps
- Mirror polished radiant plate against heater to improve efficiency
- Easy access from 3 sides for food
- Can be used to keep French fries or any food warm Separate on/off switches for lamp and heater
- Pan runner inside the cabinet
- Basket hanger rod
- Perforated liners for drainage of Fries grease Stainless steel adjustable legs
- Stainless steel handle

- **Thermostats (if applicable) available in either Fahrenheit or Celsius**
- **Available in various electrical power setups (power setups available for all areas of the world)**
- **Power may vary based on specified electrical setup**

Electrical Food Warmer

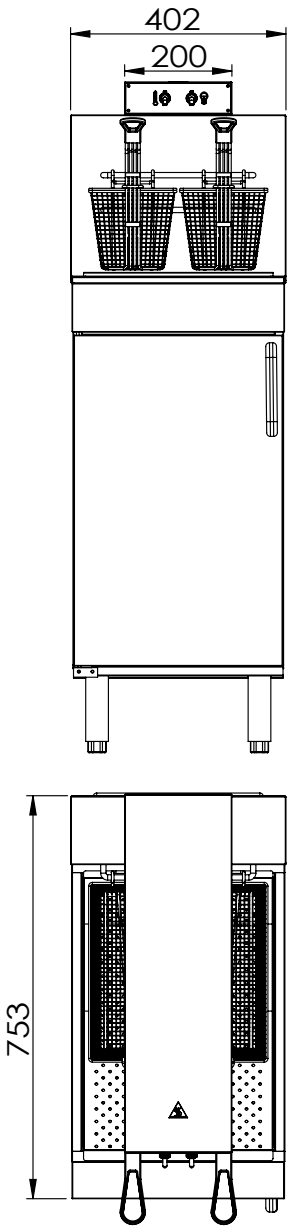

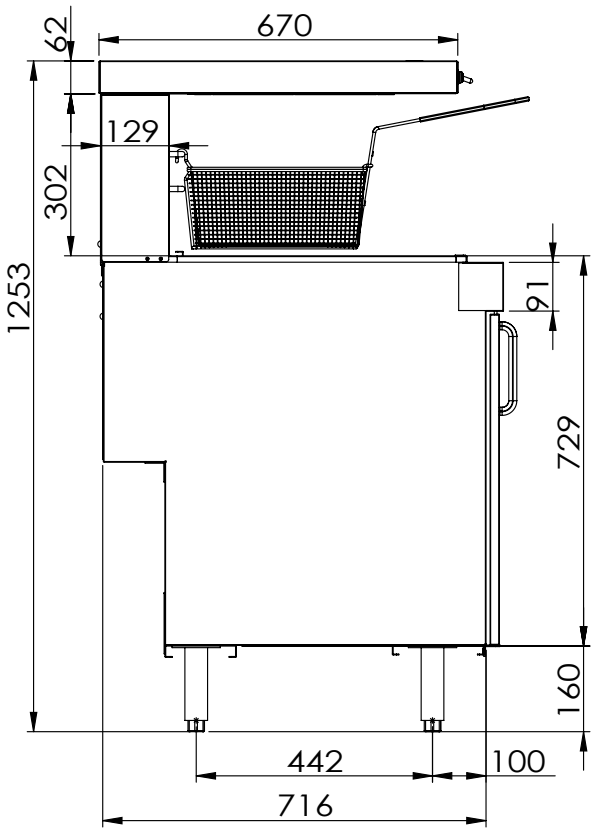

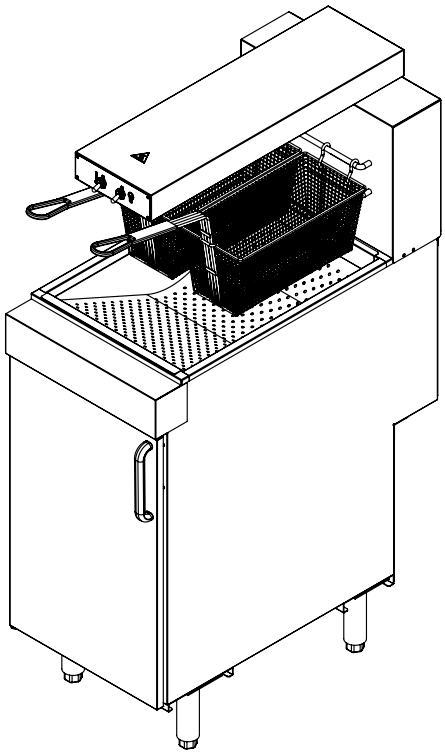

HDSEFW

MODEL	PRODUCT (WxDxH)	POWER	LAMP	NW
HDSEFW	400 x 759 x 1250 mm 16 x 30 x 49 inch	940 W	40 W	40 kg 88 lbs

sales@heavydutysystems.com

All electric cooking equipment is supplied with a cord and plug.

Electric Conveyor Oven



HDSECVO-1814

STANDARD FEATURES

- Adjustable conveyor speed
- 13 3/4” (35 cm) conveyor belt
- Individual temperature control of top and bottom elements by EGO thermostats. “7” is the hottest setting, “1” is the lowest setting
- Stainless steel body and conveyor
- Durable quartz heater
- Geared motor with cooling fan
- Locking plate on both ends to be adjusted
- Crumb tray on both ends for easy cleaning
- Stainless steel adjustable legs and control knobs

- **Thermostats (if applicable) available in either Fahrenheit or Celsius**
- **Available in various electrical power setups (power setups available for all areas of the world)**
- **Power may vary based on specified electrical setup**

Electric Conveyor Oven

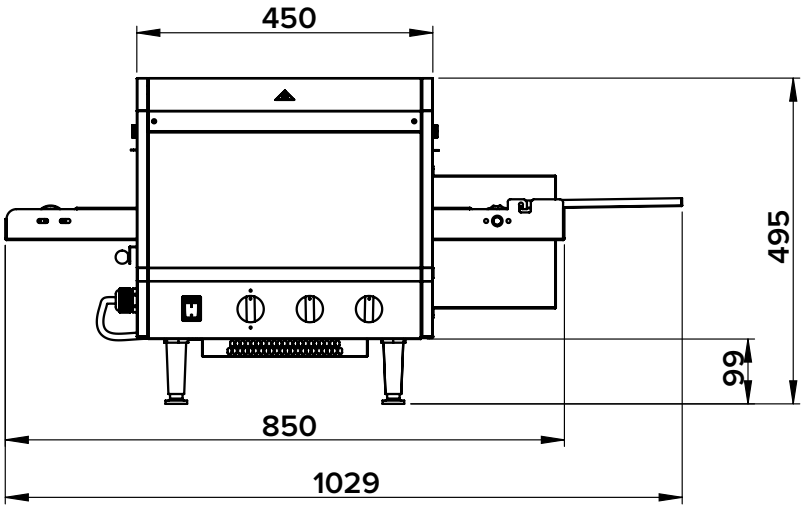

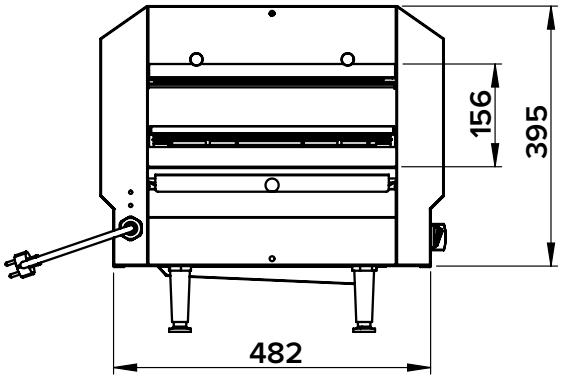

HDSECVO-1814

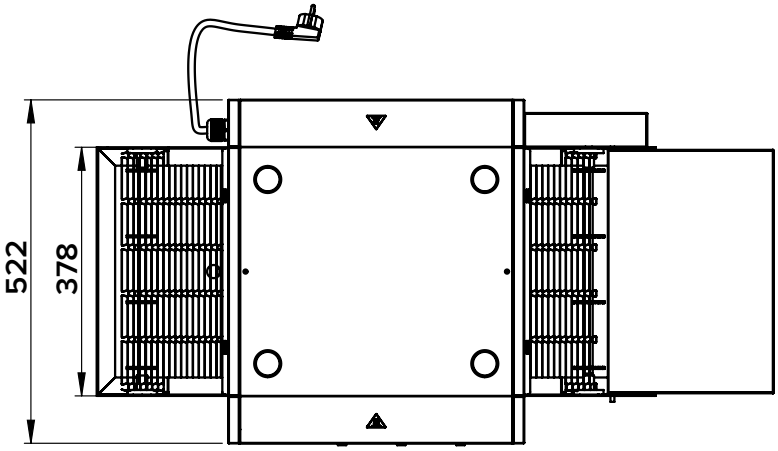

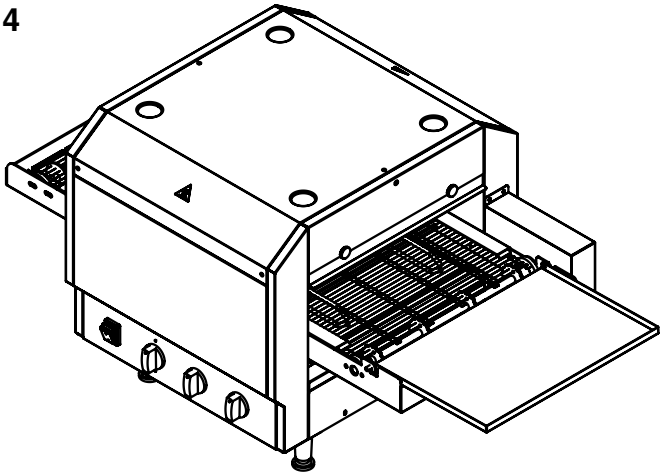

MODEL	PRODUCT (WxDxH)	POWER	HEATING AREA	NW	GW
HDSECVO-1814	1029 x 522 x 495 mm 40.5 X 20.6 X 19.5 inch	3.6kW	450 x 378 mm 17.7 x 14.9 inch	32 kg 71 lbs	39.5 kg 87 lbs

sales@heavydutysystems.com

All electric cooking equipment is supplied with a cord and plug.

Electric Convection Oven with Top Grill



HDSECO-3A

STANDARD FEATURES

- Stainless steel structure
- 120 minutes timer with bell reminder
- S/S handle with Bakelite base
- Temperature control varies from 30~300°C (86~572 °F)
- Temperature limiter set at 340°C with manual reset for safety
- Four aluminum baking trays
- Double visual toughened glass
- Double fans with circular heaters for even temperature
- Round cornered chamber for easy cleaning
- Special baffle plate to control temperature evenness
- Suitable for all types of bakery, meat cooking
- Green indicator for timer and thermostat
- 62 Liters capacity cavity
- Chamber illuminator
- Top grilling function to melt cheese or top browning of food
- Manual steaming function (HDSECO-4A ONLY)

- **Thermostats (if applicable) available in either Fahrenheit or Celsius**
- **Available in various electrical power setups (power setups available for all areas of the world)**
- **Power may vary based on specified electrical setup**

Electric Convection Oven with Top Grill

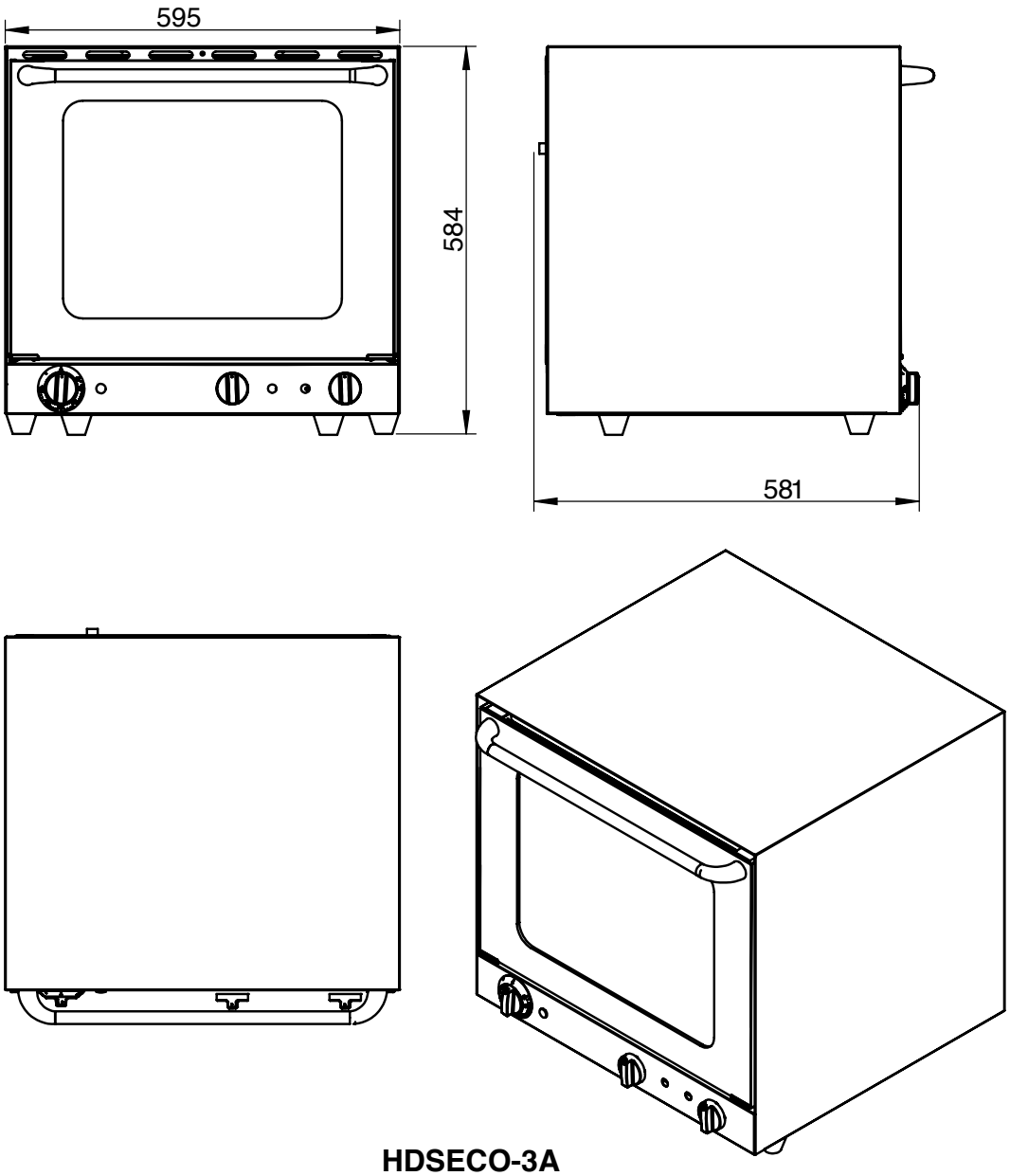

HDSECO-3A

MODEL	CAVITY SIZE (WxDxH)	PRODUCT (WxDxH)	TRAY SIZE (WxDxH)	CAVITY MATERIAL	POWER	STEAMING	NW
HDSECO-3A	460 x 375 x 360 mm 18.1 x 14.8 x 14.2 inch	595 x 580 x 570 mm 23.4 x22.8 x 22.4 inch	450 x 325 mm 17.7 x 12.8 inch	S/S	2670W / 2000 W	No	39 kg 86 lbs
HDSECO-4A	460 x 375 x 360 mm 18.1 x 14.8 x 14.2 inch	595 x 580 x 570 mm 23.4 x22.8 x 22.4 inch	450 x 325 mm 17.7 x 12.8 inch	S/S	2670W / 2000 W	Yes	39 kg 86 lbs

sales@heavydutysystems.com

All electric cooking equipment is supplied with a cord and plug.

Electric Convection Oven



HDSECO-8A
(Stand Not Included)

STANDARD FEATURES

- Stainless steel structure
- 120 minutes timer with bell reminder
- S/S handle with Bakelite base
- Temperature control varies from 30~300°C (86~572 °F)
- Temperature limiter set at 360°C with manual reset for safety
- Four 18” × 26” (457 × 660 mm) baking grids supplied as standard — US full-sheet size
- Accepts US 18” × 26” trays in place of the grids, or European 400 × 600 mm trays placed on the grids
- Double visual toughened glass
- Double fans with circular heaters for even temperature
- Auto-reverse cycling (90s~13s~90s) for better heat distribution
- Round cornered chamber for easy cleaning
- Special baffle plate to control temperature evenness
- Manual steaming function
- Water connection required for steaming: 1/2” water line to the solenoid valve; water hardness 0.5°–5°F (French Degree); water pressure 50–200 kPa (7–29 psi).
- 116 Litres capacity cavity
- Chamber illuminator
- Available in S/S cavity or enameled cavity
- Thermostats (if applicable) available in either Fahrenheit or Celsius
- Available in various electrical power setups (power setups available for all areas of the world)
- Power may vary based on specified electrical setup

Electric Convection Oven

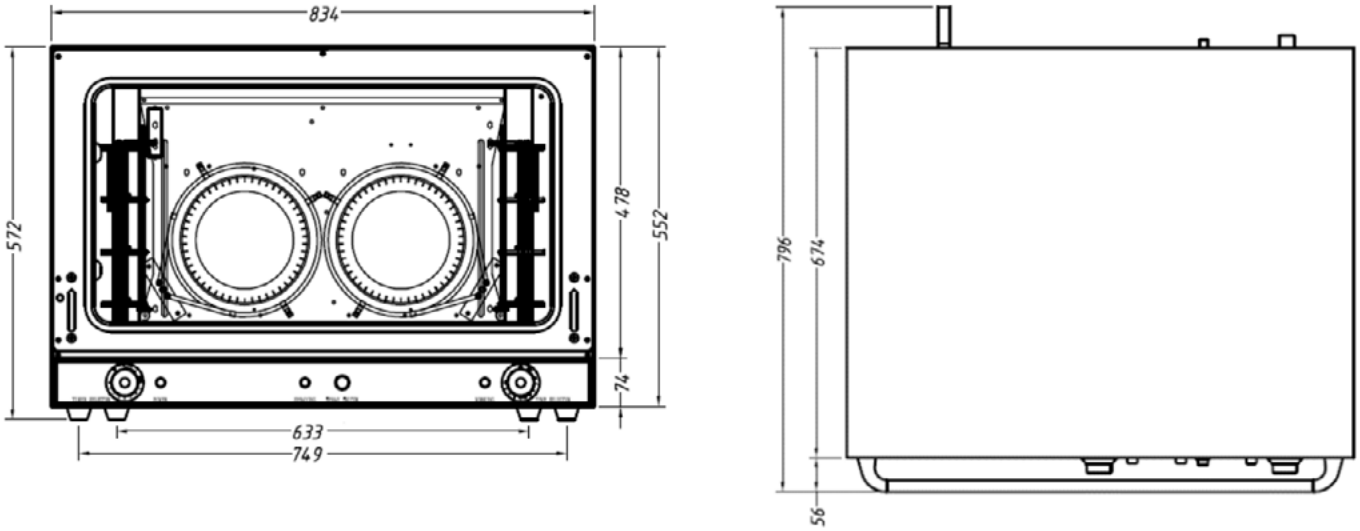

HDSECO-8A

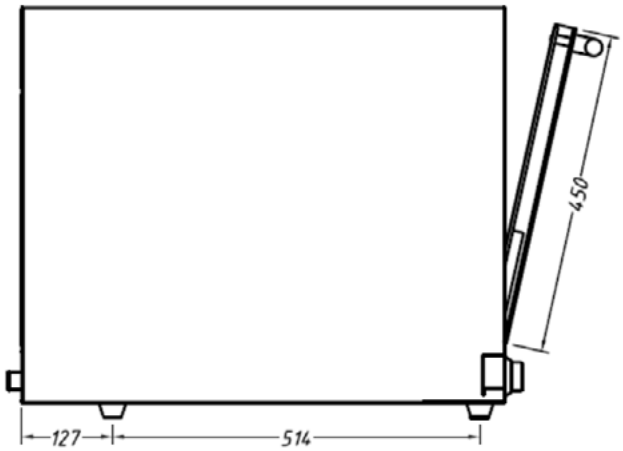

MODEL	CAVITY SIZE (WxDxH)	PRODUCT (WxDxH)	TRAY SIZE (WxDxH)	CAVITY MATERIAL	POWER	NW
HDSECO-8A	700 x 460 x 360 mm 27.6 x 18.1 x 14.2 inch	834 x 796 x 572 mm 32.8 x 31.3 x 22.5 inch	457 x 660 mm 18 x 26 inch	Enameled	3,800–5,000 W (208–240 V/1 ph) 6,400 W (380 V/3 ph)	73 kg 161 lbs
HDSECO-8AS	700 x 460 x 360 mm 27.6 x 18.1 x 14.2 inch	834 x 796 x 572 mm 32.8 x 31.3 x 22.5 inch	457 x 660 mm 18 x 26 inch	S/S	3,800–5,000 W (208–240 V/1 ph) 6,400 W (380 V/3 ph)	73 kg 161 lbs

sales@heavydutysystems.com

All electric cooking equipment is supplied with a cord and plug.

Electric Convection Oven with Cook & Hold Function



HDSECO-6A
(Stand Not Included)

STANDARD FEATURES

- Stainless steel structure
- 60 minutes timer with bell reminder
- Ceramic coated cavity for easy cleaning
- Temperature control varies from 30~300°C (86~572 °F)
- GN1/1 size, 4 trays capacity
- Four wire racks
- Cook & Hold function
- Holding temperature preset to 85°C (185°F)
- 180 minutes cooking timer
- Round cornered chamber for easy cleaning
- Special baffle plate to control temperature evenness
- Suitable for all types of bakery, meat cooking
- Top and bottom heating elements
- Fan is stopped once door is opened
- Chamber illuminator
- Grill function

- **Thermostats (if applicable) available in either Fahrenheit or Celsius**
- **Available in various electrical power setups (power setups available for all areas of the world)**
- **Power may vary based on specified electrical setup**

Electric Convection Oven with Cook & Hold Function

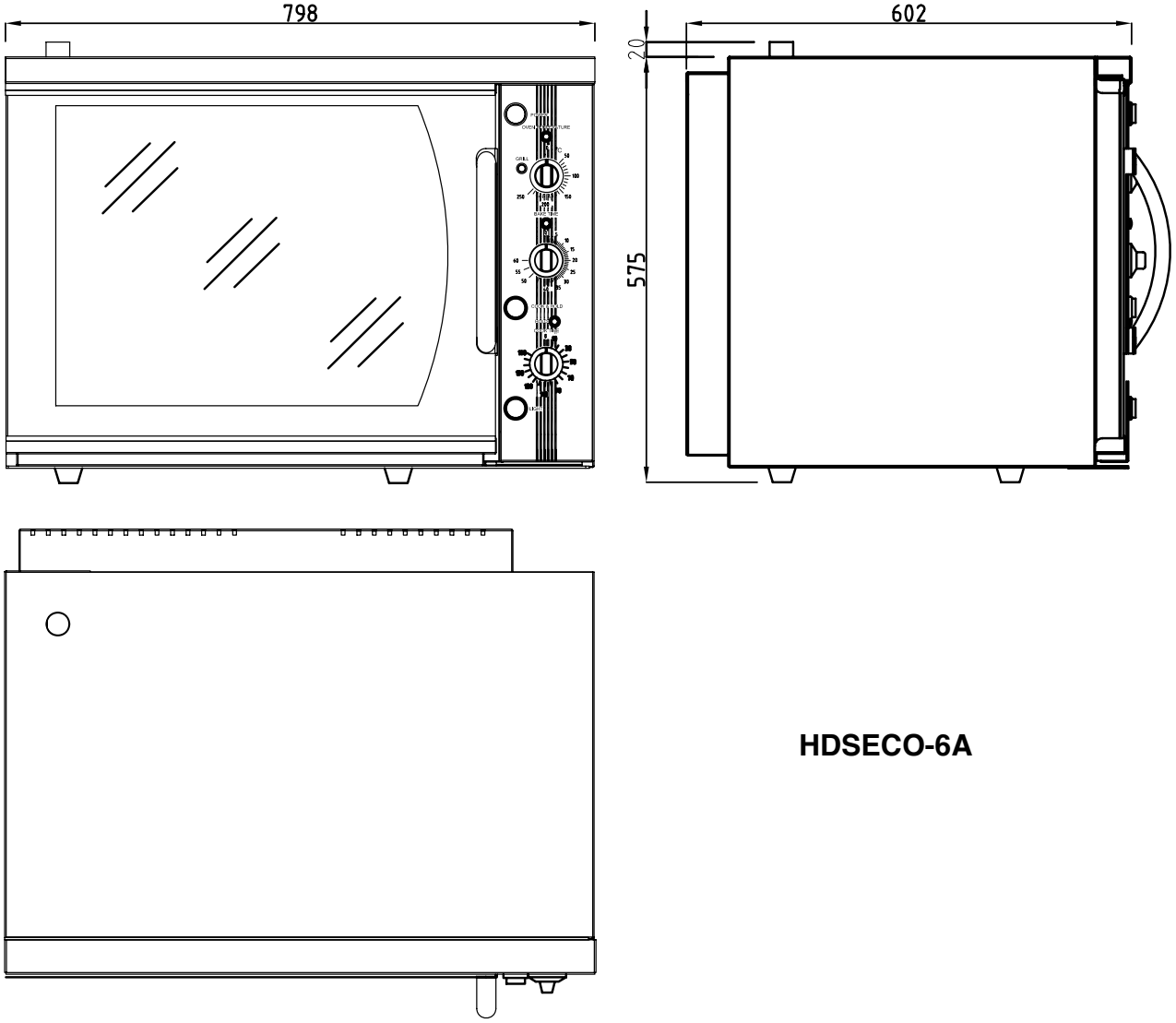

HDSECO-6A

MODEL	PRODUCT (WxDxH)	RACK SIZE	CAVITY MATERIAL	POWER	NW
HDSECO-6A	796 x 670 x 580 mm 31.3 x 26.4 x 22.8 inch	GN1/1	Enameled	2800 W	44 kg 97 lbs

sales@heavydutysystems.com

All electric cooking equipment is supplied with a cord and plug.

Electric Convection Oven – Full Size



HDSECO-1

STANDARD FEATURES

- Stainless steel front and sides with painted steel legs on casters
- Stainless steel heating elements
- Temperature adjustable from 167°F-563°F (75-295 °C)
- Porcelainized interior, easy to clean
- Dual pane thermal glass windows
- 60-minute electric timer with bell
- Auto reverse fan (1/6 hp motor)
- Removable 11-position rack guides
- 4 heavy duty chrome plated racks
- Compatible with PRK-HDSECO-1 pan rack kit
- Cooling down function
- Interior chamber light
- Double stacking options to optimize kitchen space
- Micro switch for complete shut off once door is opened

- **Thermostats (if applicable) available in either Fahrenheit or Celsius**
- **Available in various electrical power setups (power setups available for all areas of the world)**
- **Power may vary based on specified electrical setup**

Electric Convection Oven – Full Size

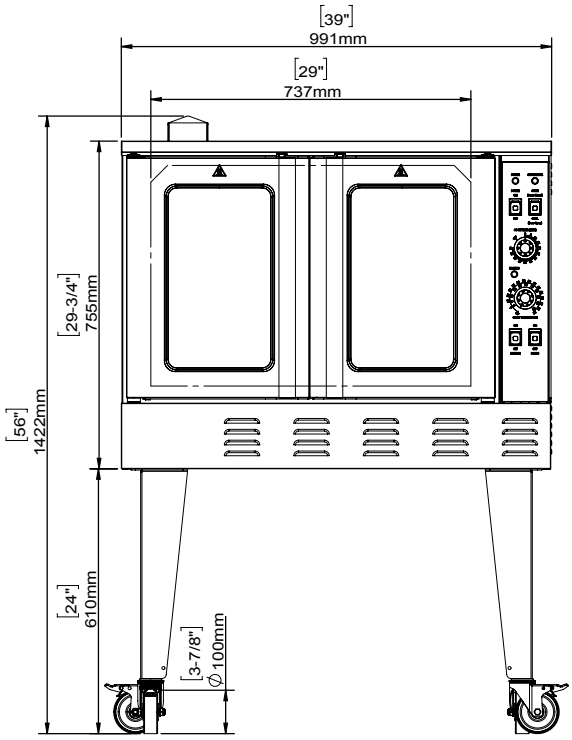

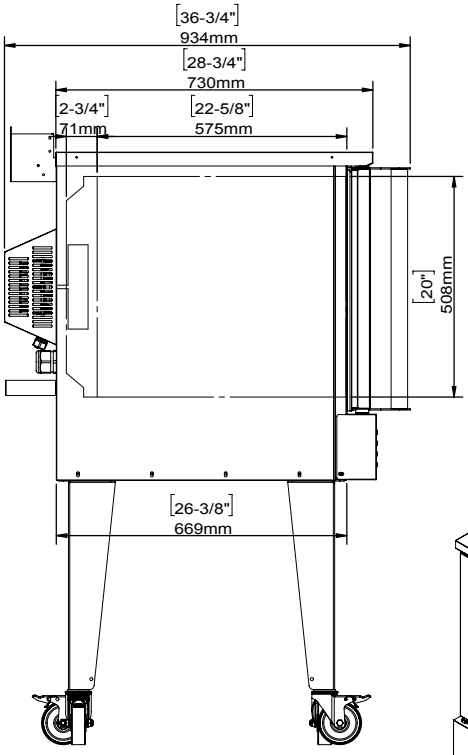

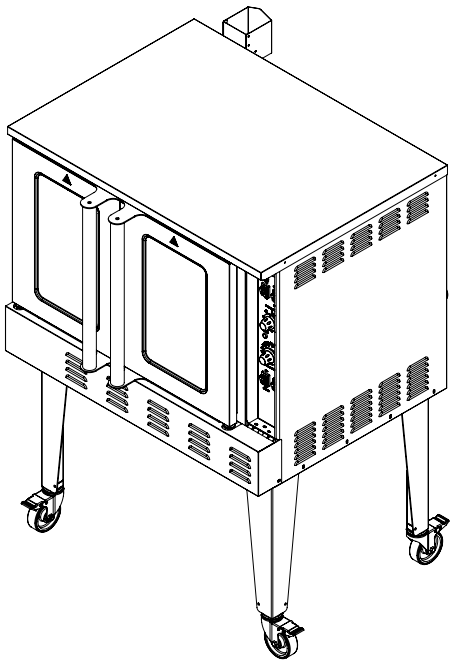

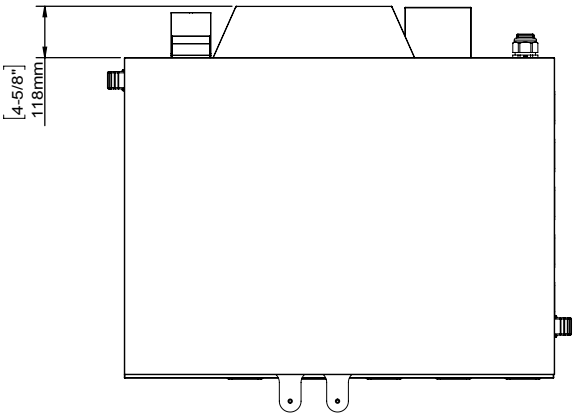

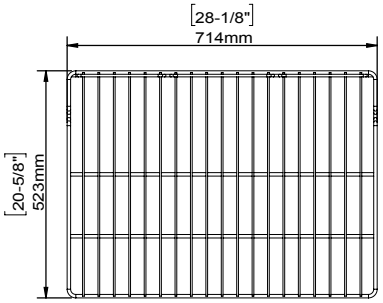

HDSECO-1

MODEL	PRODUCT (WxDxH)	POWER	NW
HDSECO-1	991 x 934 x 1422 mm 39 x 36.8 x 56 inch	9 kW	180 kg 396 lbs

sales@heavydutysystems.com

All electric cooking equipment is supplied with a cord and plug.

Electric Combi Oven



HDSCS-10

STANDARD FEATURES

- Stainless steel structure
- 99 minutes 59 seconds digital timer
- S/S handle with Bakelite base
- Temperature control varies from 30~250°C (86 °F~482 °F)
- Temperature limiter set at 329°C with manual reset for safety
- Four GN1/1 wire rack
- Double visual toughened glass
- Forced air circulation for even temperature
- Round cornered chamber for easy cleaning
- Special baffle plate to control temperature evenness
- Suitable for all types of bakery, meat cooking
- Direct water spray to generate steam
- Chamber illuminator
- Trip switch to shut off circulating fan once door is opened

- **Thermostats (if applicable) available in either Fahrenheit or Celsius**
- **Available in various electrical power setups (power setups available for all areas of the world)**
- **Power may vary based on specified electrical setup**

Electric Combi Oven

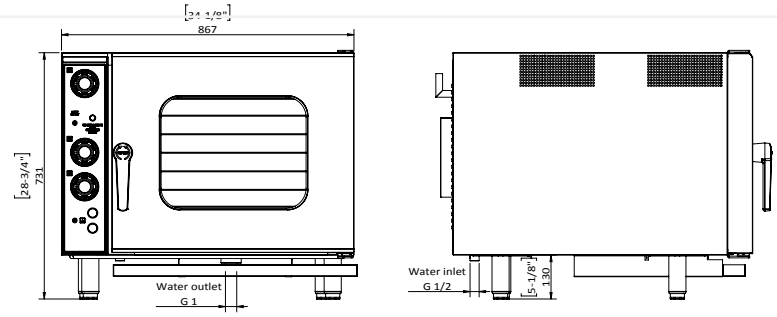

HDSCS-06

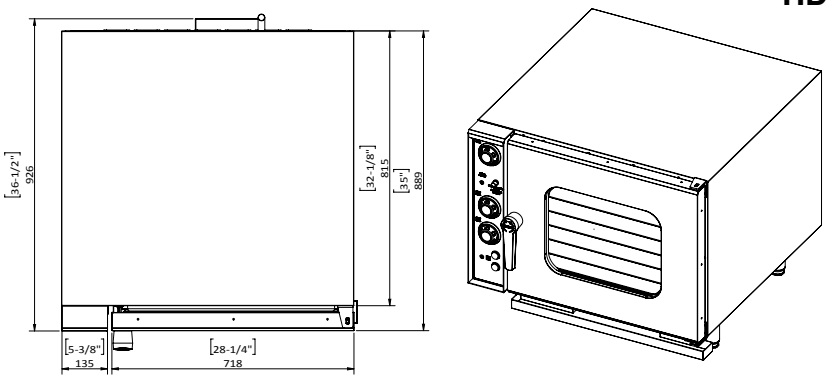

HDSCS-10

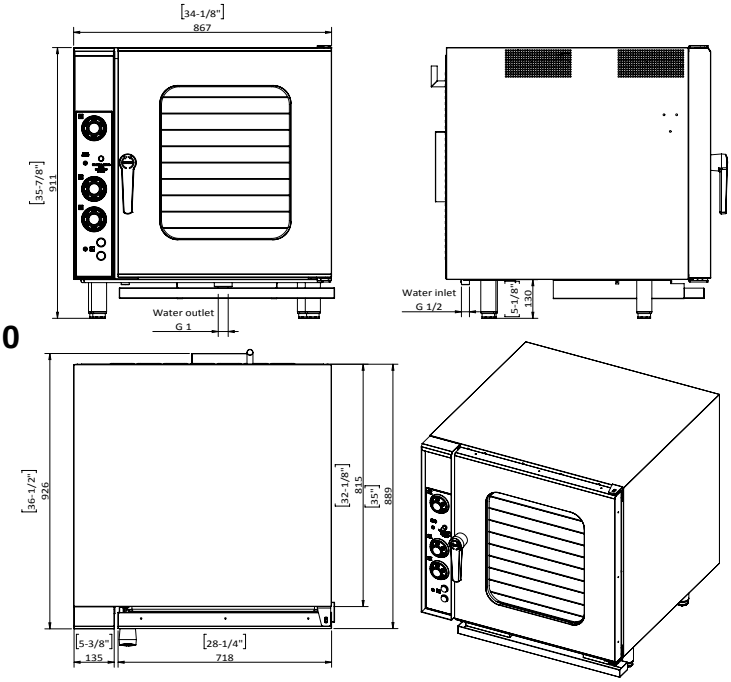

MODEL	TRAYS	PRODUCT (WxDxH)	TRAY SIZE	CAVITY MATERIAL	POWER	NW
HDSCS-06	6	867 x 925 x 780 mm 34.1 x 36.4 x 30.7 inch	GN1/1	S/S	12 kW	120 kg 264 lbs
HDSCS-10	10	867 x 925 x 780 mm 34.1 x 36.4 x 30.7 inch	GN1/1	S/S	18 kW	150 kg 330 lbs

sales@heavydutysystems.com

All electric cooking equipment is supplied with a cord and plug.

Electric Salamander



HDSES-4000L

STANDARD FEATURES

- Durable alloy heater
- Infinite switch with continuous function
- Stainless steel structure
- Lifting suspension system to stay any position you want
- Wire grid in the bottom to put food on Stainless steel crumb collector with handle
- Recessed control in the front panel to prevent heat radiant
- Cool to touch Bakelite handle on the top Anti-slip rubber feet

- **Thermostats (if applicable) available in either Fahrenheit or Celsius**
- **Available in various electrical power setups (power setups available for all areas of the world)**
- **Power may vary based on specified electrical setup**

Electric Salamander

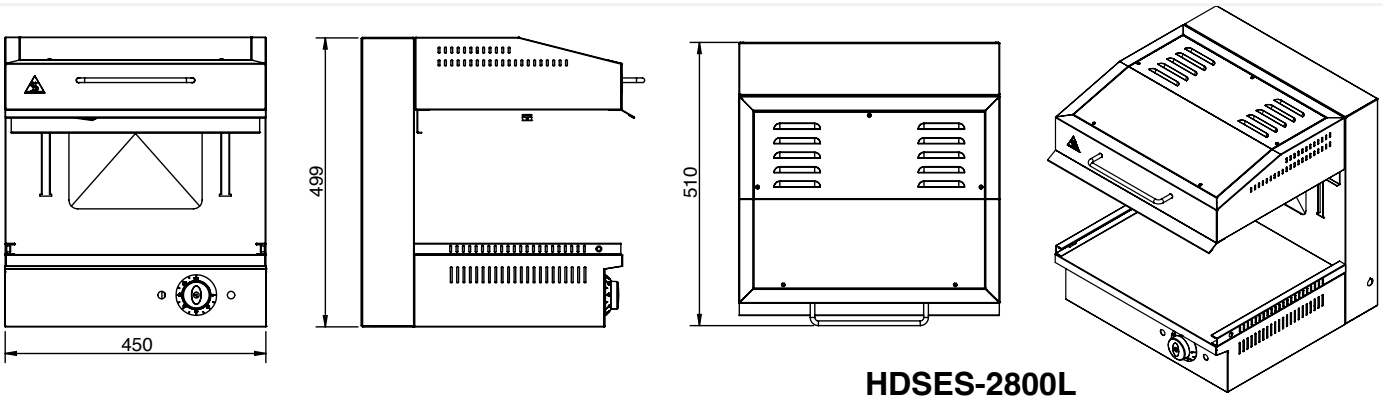

HDSES-2800L

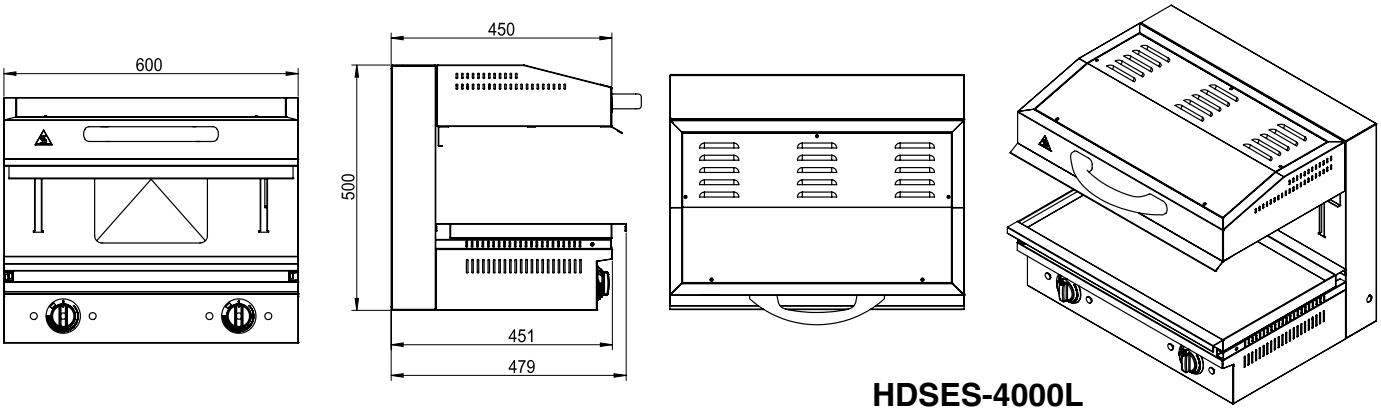

HDSES-4000L

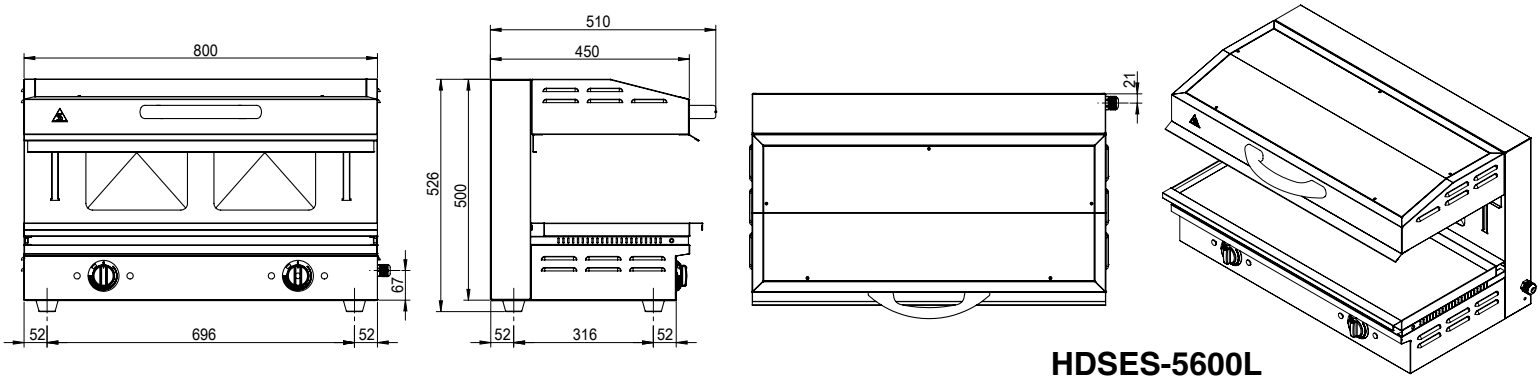

HDSES-5600L

MODEL	PRODUCT (WxDxH)	POWER	GRID	HEIGHT DISTAINCE	NW
HDSES-2800L	450 x 450 x 500 mm 18 x 18 x 20 inch	2800 W	440 x 320 mm 17 x 13 inch	140 mm 5.5 inch	39 kg 86 lbs
HDSES-4000L	600 x 450 x 500 mm 24 x 18 x 20 inch	4000 W	590 x 320 mm 23 x 13 inch	140 mm 5.5 inch	49 kg 108 lbs
HDSES-5600L	800 x 450 x 500 mm 32 x 18 x 20 inch	5600 W	790 x 320 mm 31 x 13 inch	140 mm 5.5 inch	63 kg 139 lbs

sales@heavydutysystems.com

All electric cooking equipment is supplied with a cord and plug.

Electric Braising Pan



HDSBPE-80

STANDARD FEATURES

- All stainless steel structure
- 80L/60L capacity pan
- SS316 pan bottom
- Tilting pan design for easy unloading
- Temperature can be adjusted from 60~300°C (140~572°F)
- 340°C (644°F) hi limit for safety Multi functional unit
- Thermal coupling for gas safety Standby pilot
- Stainless steel cabinet door

- **Thermostats (if applicable) available in either Fahrenheit or Celsius**
- **Available in various electrical power setups (power setups available for all areas of the world)**
- **Power may vary based on specified electrical setup**

Electric Braising Pan

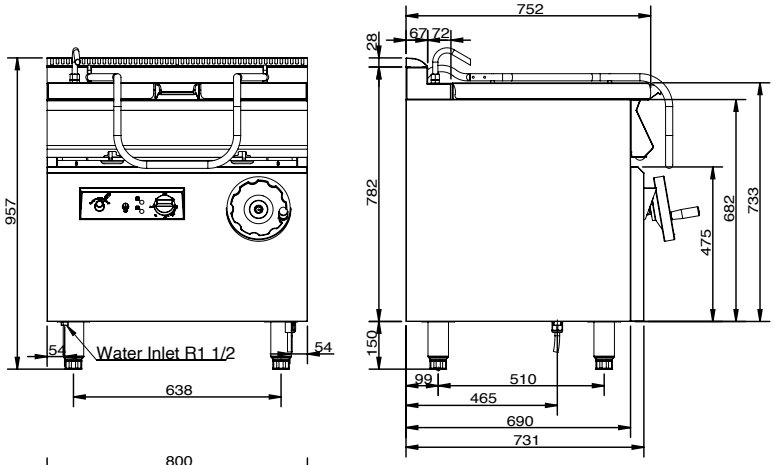

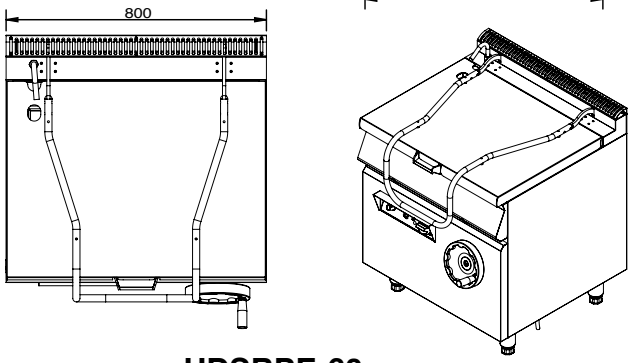

HDSBPE-60

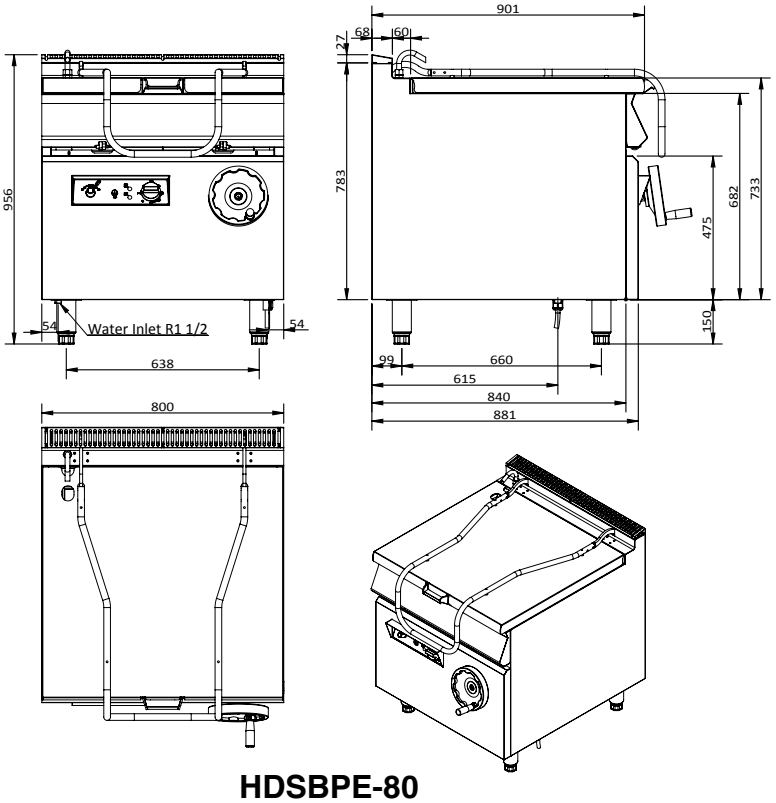

HDSBPE-80

MODEL	PRODUCT (WxDxH)	CAPACITY	POWER	GW	NW
HDSBPE-60	800 x 750 x 850 mm 32 x 30 x 34 inchs	60 L	9.3kW	185 kg 407 lbs	122 kg 268 lbs
HDSBPE-80	800 x 900 x 850 mm 32 x 35 x 34 inchs	80 L	21kW	206 kg 453 lbs	135 kg 297 lbs

sales@heavydutysystems.com

All electric cooking equipment is supplied with a cord and plug.

Electric Kettle



HDSSKE-100

STANDARD FEATURES

- All stainless steel structure 100L/150L capacity pan SS pan bottom
- Jacketed layer
- High power
- 2” drain cock
- Stainless steel heating elements Heating indicator

- **Thermostats (if applicable) available in either Fahrenheit or Celsius**
- **Available in various electrical power setups (power setups available for all areas of the world)**
- **Power may vary based on specified electrical setup**

Electric Kettle

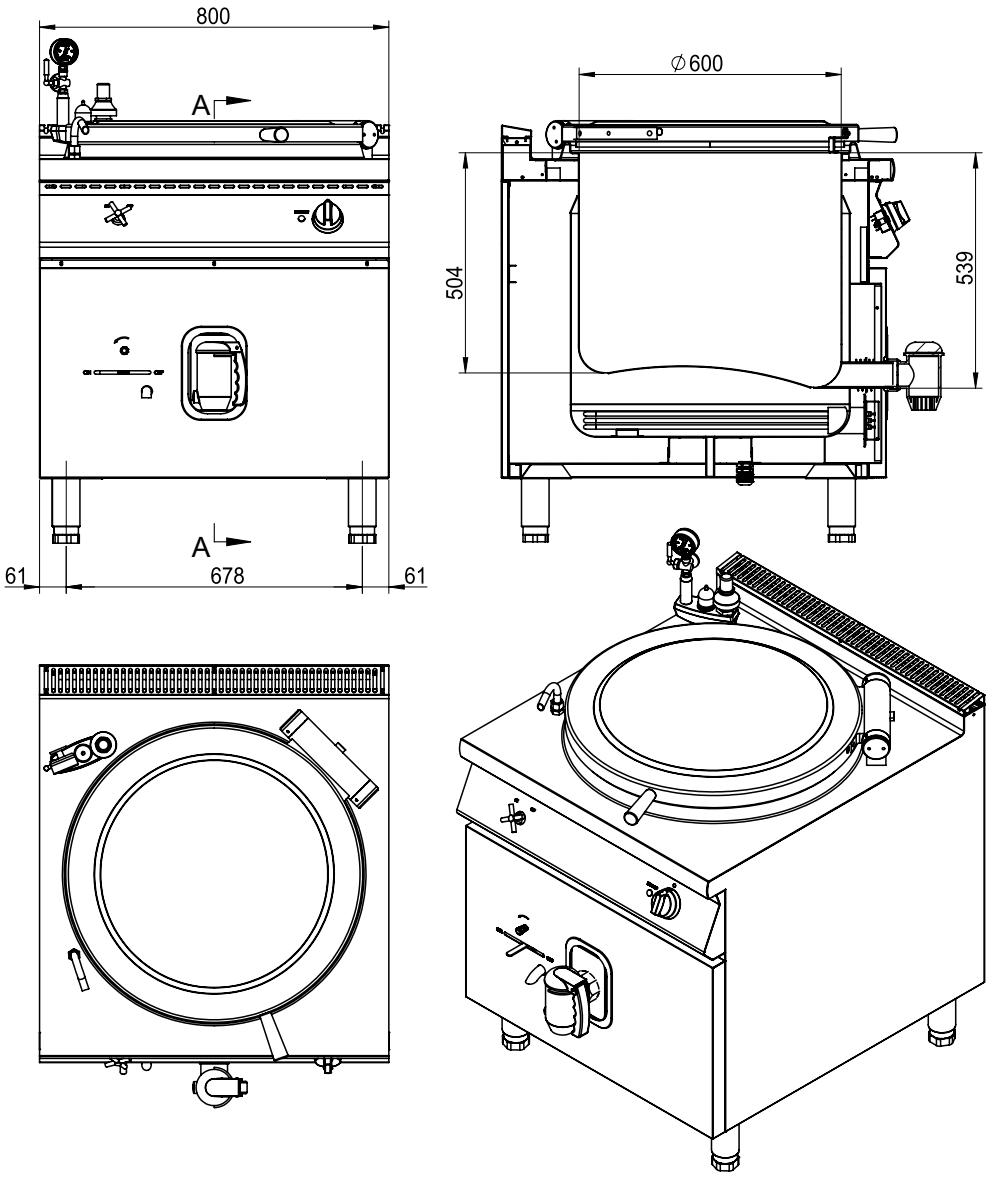

HDSSKE-100

MODEL	PRODUCT (WxDxH)	CAPACITY	POWER	GW	NW
HDSSKE-100	800 x 900 x 850 mm 32 x 35 x 34 inchs	100 L	18kW	213 kg 469 lbs	142 kg 312 lbs
HDSSKE-150	800 x 900 x 850 mm 32 x 35 x 34 inchs	150 L	24kW	213 kg 469 lbs	142 kg 312 lbs

sales@heavydutysystems.com

All electric cooking equipment is supplied with a cord and plug.

Electric Kebab Machine



HDSEK-2

STANDARD FEATURES

- High efficiency heating elements
- EGO energy regulator
- Four switches to be controlled separately
- Gear box motor to be rotated
- Large oil collector
- Distance can be adjusted to have different temperatures
- Anti-slip rubber feet

- **Thermostats (if applicable) available in either Fahrenheit or Celsius**
- **Available in various electrical power setups (power setups available for all areas of the world)**
- **Power may vary based on specified electrical setup**

Electric Kebab Machine

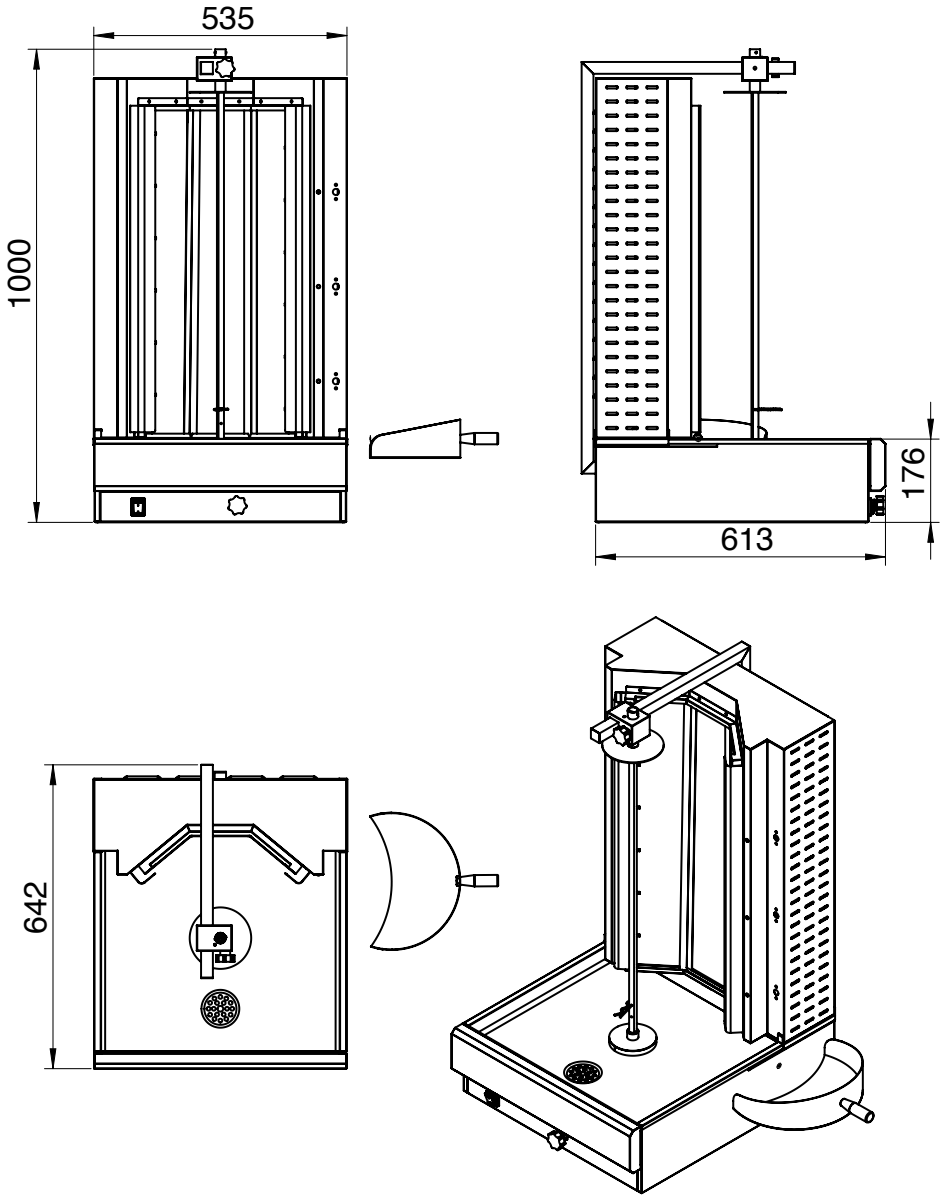

HDSEK-2

MODEL	PRODUCT (WxDxH)	RPM	POWER	GW	NW
HDSEK-2	534 x 607 x 950 mm 21 x 24 x 37 inch	2.5	9.9kW	48 kg 106 lbs	31 kg 48 lbs

sales@heavydutysystems.com

All electric cooking equipment is supplied with a cord and plug.

Electric Rotisserie



HDSER-12

STANDARD FEATURES

- Stainless steel housing
- Thermostat control up to 300ºC (572ºF)
- On/off switch for chamber lights
- On/off switch for rotating motor
- Heavy duty 80W motor for rotation
- Front and back toughened glass
- Rubber seal for air tightness to keep heat inside chamber
- Double handles on glass door Oil collector at the bottom
- Four baskets to put chicken pieces inside
- Swivel castors for easy movement

- **Thermostats (if applicable) available in either Fahrenheit or Celsius**
- **Available in various electrical power setups (power setups available for all areas of the world)**
- **Power may vary based on specified electrical setup**

Electric Rotisserie

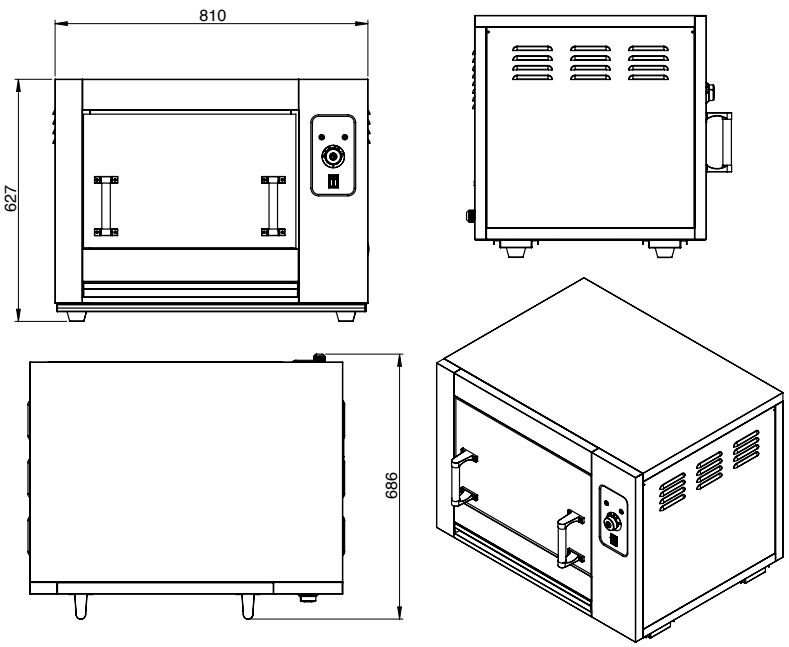

HDSER-12

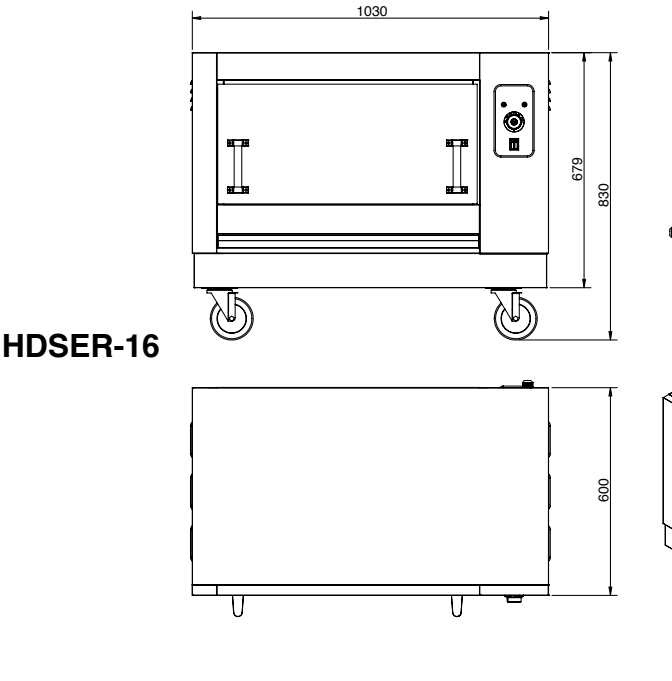

HDSER-16

MODEL	PRODUCT (WxDxH)	CAPACITY	POWER	TEMPERATURE	NW
HDSER-12	810 x 630 x 610 mm 32 x 25 x 24 inch	12 birds	4500 W	30 - 300°C 86 - 572°F	142 kg 312 lbs
HDSER-16	1010 x 630 x 800 mm 40 x 25 x 32 inch	16 birds	6000 W	30 - 300°C 86 - 572°F	142 kg 312 lbs

sales@heavydutysystems.com

All electric cooking equipment is supplied with a cord and plug.

Electric Panini Sandwich Grill – 12” Width



HDSPG-GG-12

STANDARD FEATURES

- Ceramic coated cast iron cooking plate
- Full stainless steel structure
- Different types of cooking plate
- Grooved top plates provide tantalizing grill marks
- Smooth bottom ensures even heat supply
- Cool to touch Bakelite handle
- EGO thermostat
- Temperature control varies from 90~570°F (32 °C~299 °C)
- Temperature limiter with manual reset for safety
- Bakelite knob, easy to manipulate
- Oil collector in the front
- Counter balance spring system
- Rubber foot

- **Thermostats (if applicable) available in either Fahrenheit or Celsius**
- **Available in various electrical power setups (power setups available for all areas of the world)**
- **Power may vary based on specified electrical setup**

Electric Panini Sandwich Grill – 12” Width

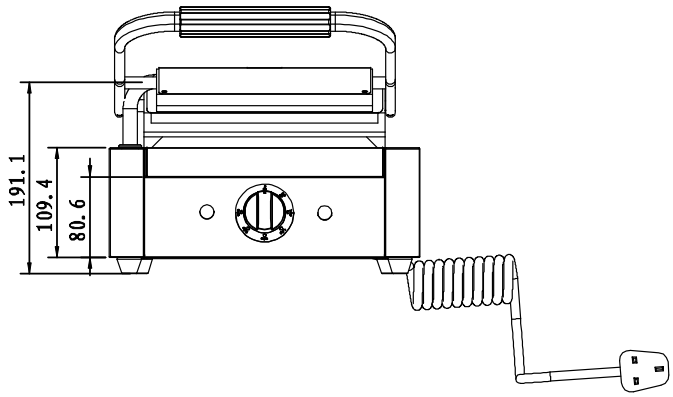

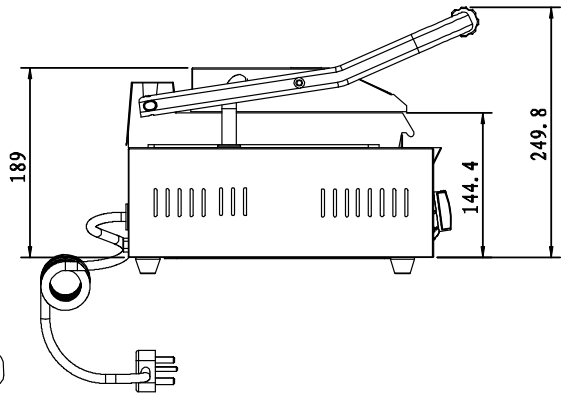

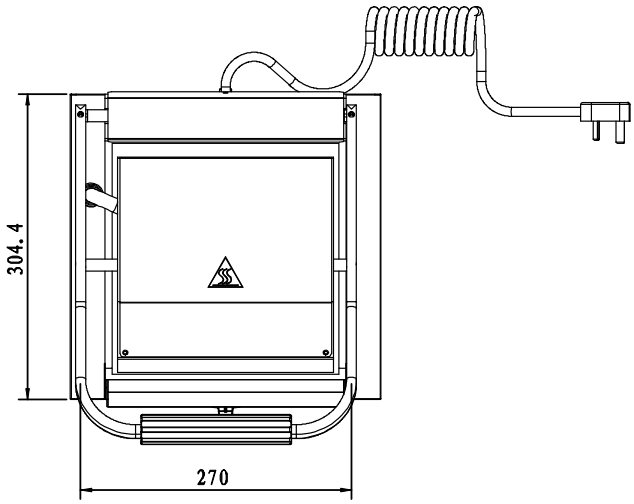

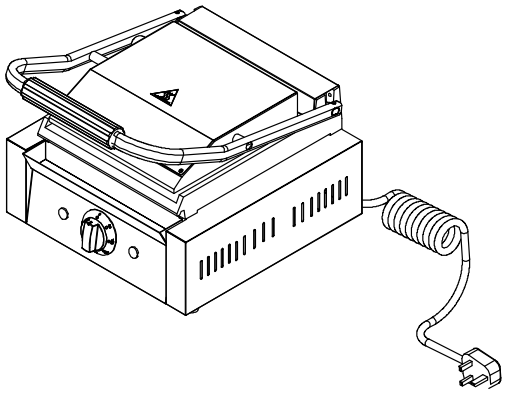

HDSPG-FF-12 **HDSPG-GG-12** **HDSPG-GF-12**

MODEL	PRODUCT (WxDxH)	POWER	COOKING SURFACE	TOP PLATE	BOTTOM PLATE	NW
HDSPG-GG-12	290 x 305 x 210 mm 11.4 x 12 x 8.3 inch	1800 W	214 x 214 mm 8.4 x 8.4 inch	Ribbed	Ribbed	14 kg 31 lbs
HDSPG-FF-12	290 x 305 x 210 mm 11.4 x 12 x 8.3 inch	1800 W	214 x 214 mm 8.4 x 8.4 inch	Flat	Flat	14 kg 31 lbs
HDSPG-FG-12	290 x 305 x 210 mm 11.4 x 12 x 8.3 inch	1800 W	214 x 214 mm 8.4 x 8.4 inch	Ribbed	Flat	14 kg 31 lbs

sales@heavydutysystems.com

All electric cooking equipment is supplied with a cord and plug.

Electric Panini Sandwich Grill – 16” Width



HDSPG-GG-16

STANDARD FEATURES

- Ceramic coated cast iron cooking plate
- Full stainless steel structure
- Different types of cooking plate
- Grooved top plates provide tantalizing grill marks
- Smooth bottom ensures even heat supply
- Cool to touch Bakelite handle
- EGO thermostat
- Temperature control varies from 90~570°F (32 °C~299 °C)
- Temperature limiter with manual reset for safety
- Bakelite knob, easy to manipulate
- Oil collector in the front
- Counter balance spring system
- Rubber foot

- **Thermostats (if applicable) available in either Fahrenheit or Celsius**
- **Available in various electrical power setups (power setups available for all areas of the world)**
- **Power may vary based on specified electrical setup**

Electric Panini Sandwich Grill – 16” Width

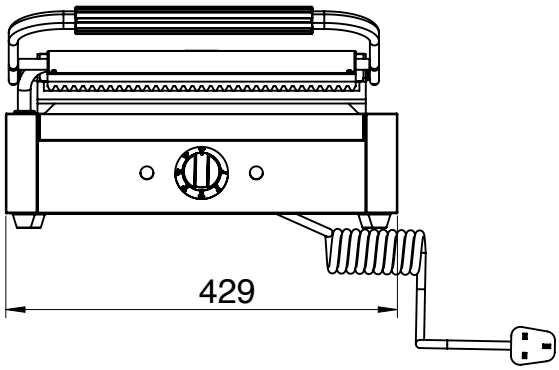

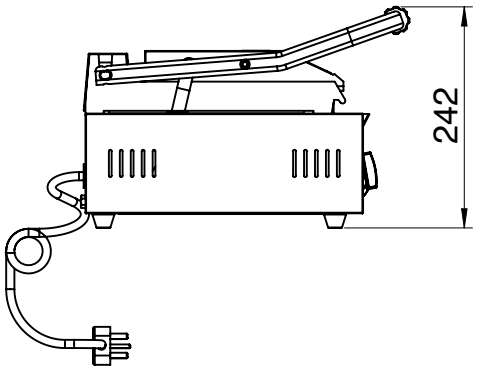

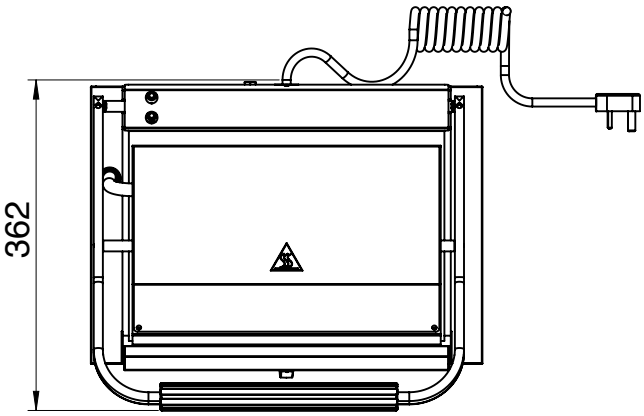

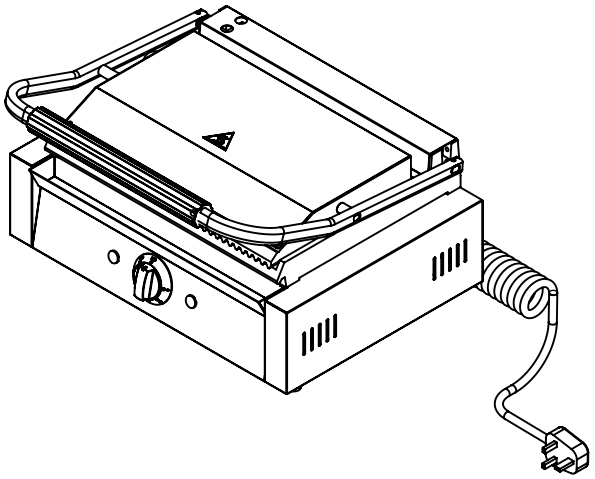

HDSPG-FF-16 **HDSPG-GG-16** **HDSPG-GF-16**

MODEL	PRODUCT (WxDxH)	POWER	COOKING SURFACE	TOP PLATE	BOTTOM PLATE	NW
HDSPG-GG-16	410 x 305 x 210 mm 16.1 x 12 x 8.3 inch	2200 W	338 x 220 mm 13.3 x 8.6 inch	Ribbed	Ribbed	19 kg 42 lbs
HDSPG-FF-16	410 x 305 x 210 mm 16.1 x 12 x 8.3 inch	2200 W	338 x 220 mm 13.3 x 8.6 inch	Flat	Flat	19 kg 42 lbs
HDSPG-FG-16	410 x 305 x 210 mm 16.1 x 12 x 8.3 inch	2200 W	338 x 220 mm 13.3 x 8.6 inch	Ribbed	Flat	19 kg 42 lbs

sales@heavydutysystems.com

All electric cooking equipment is supplied with a cord and plug.

Electric Panini Sandwich Grill – 18” Width



HDSPG-GF-18

STANDARD FEATURES

- Mild steel plate with hard chrome coating to improve efficiency
- Full stainless steel structure
- Grooved top plates provide tantalizing grill marks
- Smooth bottom ensures even heat supply
- Cool to touch Bakelite handle
- EGO thermostat
- Temperature control varies from 90~570°F (32 °C~299 °C)
- Temperature limiter with manual reset for safety
- Bakelite knob, easy to manipulate
- Oil collector in the front
- Counter balance spring system
- Splash guard on the bottom plate to prevent food spillage
- Rubber foot

- **Thermostats (if applicable) available in either Fahrenheit or Celsius**
- **Available in various electrical power setups (power setups available for all areas of the world)**
- **Power may vary based on specified electrical setup**

Electric Panini Sandwich Grill – 18” Width

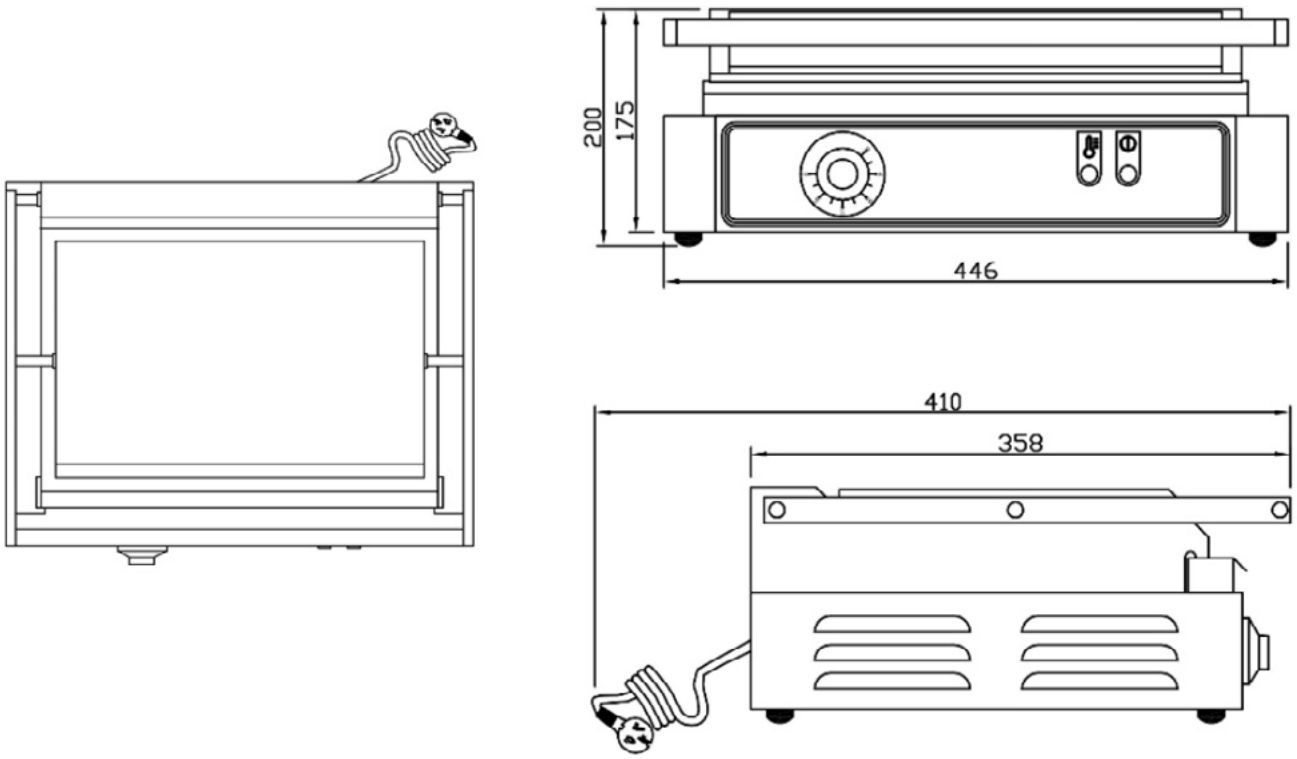

HDSPG-GF-18

MODEL	PRODUCT (WxDxH)	POWER	COOKING SURFACE	TOP PLATE	BOTTOM PLATE	NW
HDSPG-GF-18	450 x 370 x 220 mm 17.7 x 14.5 x 8.7 inch	2500 W	Top 344 x 206 x 8 mm 13.5 x 8 x 0.3 inch Bottom 375 x 242 x 8 mm 14.8 x 9.5 x 0.3 inch	Ribbed	Flat	20 kg 44 lbs

sales@heavydutysystems.com

All electric cooking equipment is supplied with a cord and plug.

Electric Panini Sandwich Grill – 22” Width



HDSPG-GG-22

STANDARD FEATURES

- Ceramic coated cast iron cooking plate
- Full stainless steel structure
- Different types of cooking plate
- Grooved top plates provide tantalizing grill marks
- Smooth bottom ensures even heat supply
- Cool to touch Bakelite handle
- EGO thermostat
- Temperature control varies from 90~570°F (32 °C~299 °C)
- Temperature limiter with manual reset for safety
- Bakelite knob, easy to manipulate
- Oil collector in the front
- Counter balance spring system
- Rubber foot

- **Thermostats (if applicable) available in either Fahrenheit or Celsius**
- **Available in various electrical power setups (power setups available for all areas of the world)**
- **Power may vary based on specified electrical setup**

Electric Panini Sandwich Grill – 22” Width

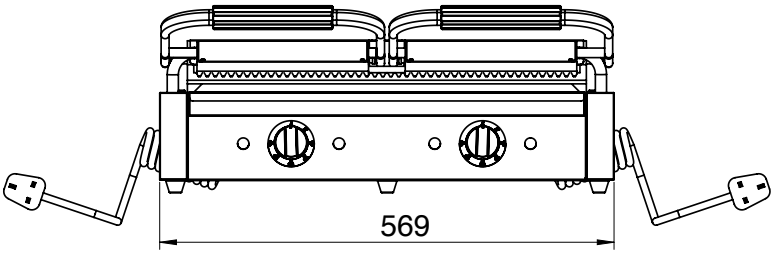

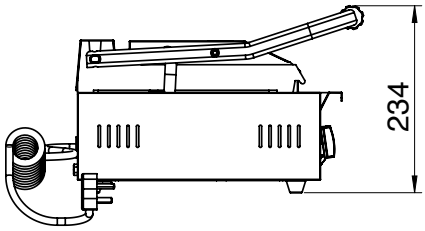

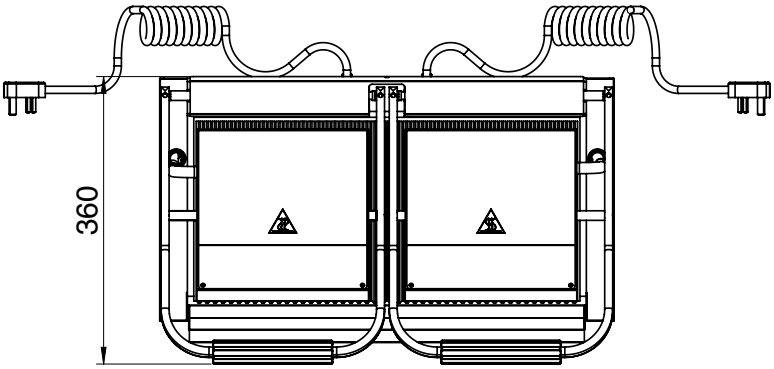

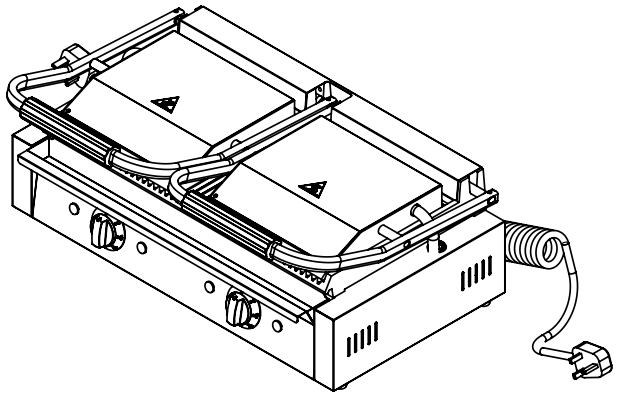

HDSPG-FF-22 **HDSPG-GG-22** **HDSPG-GF-22**

MODEL	PRODUCT (WxDxH)	POWER	COOKING SURFACE	TOP PLATE	BOTTOM PLATE	NW
HDSPG-GG-22	570 x 305 x 210 mm 22.4 x 12 x 8.3 inch	3500 W	475 x 230 mm 18.7 x 9 inch	Ribbed	Ribbed	28 kg 62 lbs
HDSPG-FF-22	570 x 305 x 210 mm 22.4 x 12 x 8.3 inch	3500 W	475 x 230 mm 18.7 x 9 inch	Flat	Flat	28 kg 62 lbs
HDSPG-GF-22	570 x 305 x 210 mm 22.4 x 12 x 8.3 inch	3500 W	475 x 230 mm 18.7 x 9 inch	Ribbed	Flat	28 kg 62 lbs

sales@heavydutysystems.com

All electric cooking equipment is supplied with a cord and plug.

Electric Panini Sandwich Grill – 33” Width



HDSPG-GG-33

STANDARD FEATURES

- Ceramic coated cast iron cooking plate
- Full stainless steel structure
- Different types of cooking plate
- Grooved top plates provide tantalizing grill marks
- Smooth bottom ensures even heat supply
- Cool to touch Bakelite handle
- EGO thermostat
- Temperature control varies from 90~570°F (32 °C~299 °C)
- Temperature limiter with manual reset for safety
- Bakelite knob, easy to manipulate
- Oil collector in the front
- Counter balance spring system
- Rubber foot

- **Thermostats (if applicable) available in either Fahrenheit or Celsius**
- **Available in various electrical power setups (power setups available for all areas of the world)**
- **Power may vary based on specified electrical setup**

Electric Panini Sandwich Grill – 33” Width

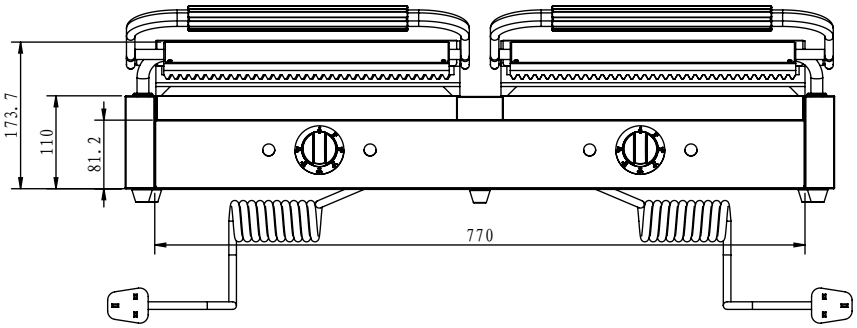

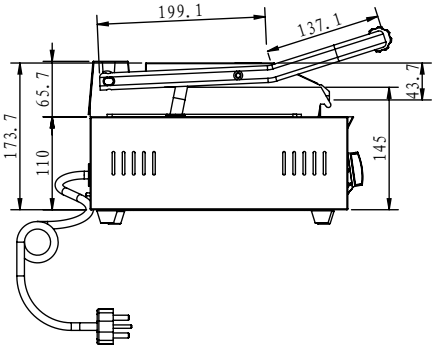

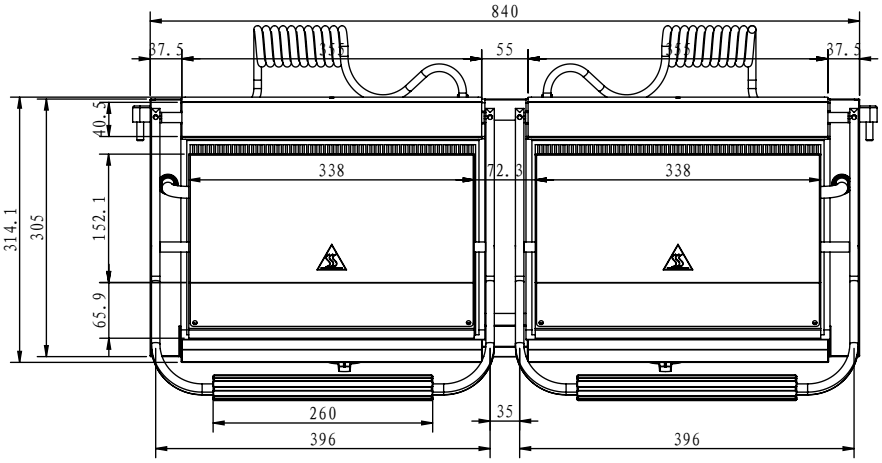

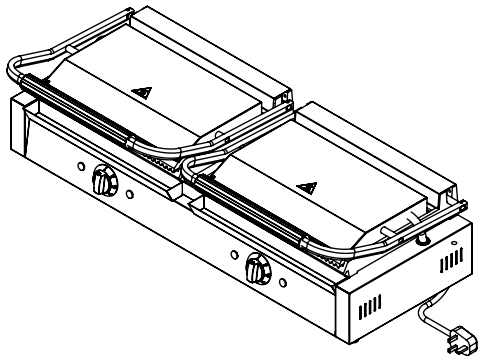

HDSPG-FF-33 **HDSPG-GG-33** **HDSPG-GF-33**

MODEL	PRODUCT (WxDxH)	POWER	COOKING SURFACE	TOP PLATE	BOTTOM PLATE	NW
HDSPG-GG-33	838 x 394 x 216 mm 33 x 15.5 x 8.5 inch	3500 W	338 x 220 mm 13 3/8 x 9 1/8 inch	Ribbed	Ribbed	33 kg 73 lbs
HDSPG-FF-33	838 x 394 x 216 mm 33 x 15.5 x 8.5 inch	3500 W	338 x 220 mm 13 3/8 x 9 1/8 inch	Flat	Flat	33 kg 73 lbs
HDSPG-GF-33	838 x 394 x 216 mm 33 x 15.5 x 8.5 inch	3500 W	338 x 220 mm 13 3/8 x 9 1/8 inch	Ribbed	Flat	33 kg 73 lbs

sales@heavydutysystems.com

All electric cooking equipment is supplied with a cord and plug.

Electric Contact Grill



HDSECG-1



STANDARD FEATURES

- Stainless steel structure
- Hard chrome-plated carbon steel cooking plates for fast heat transfer, durability and easy cleaning
- Powerful SS304 heating elements
- Independent EGO thermostat control for the upper and lower plates
- Dual power cords for independent upper- and lower-plate operation
- Digital control timer with 6 memorized menus

- **Thermostats (if applicable) available in either Fahrenheit or Celsius**
- **Available in various electrical power setups (power setups available for all areas of the world)**
- **Power may vary based on specified electrical setup**

Electric Contact Grill

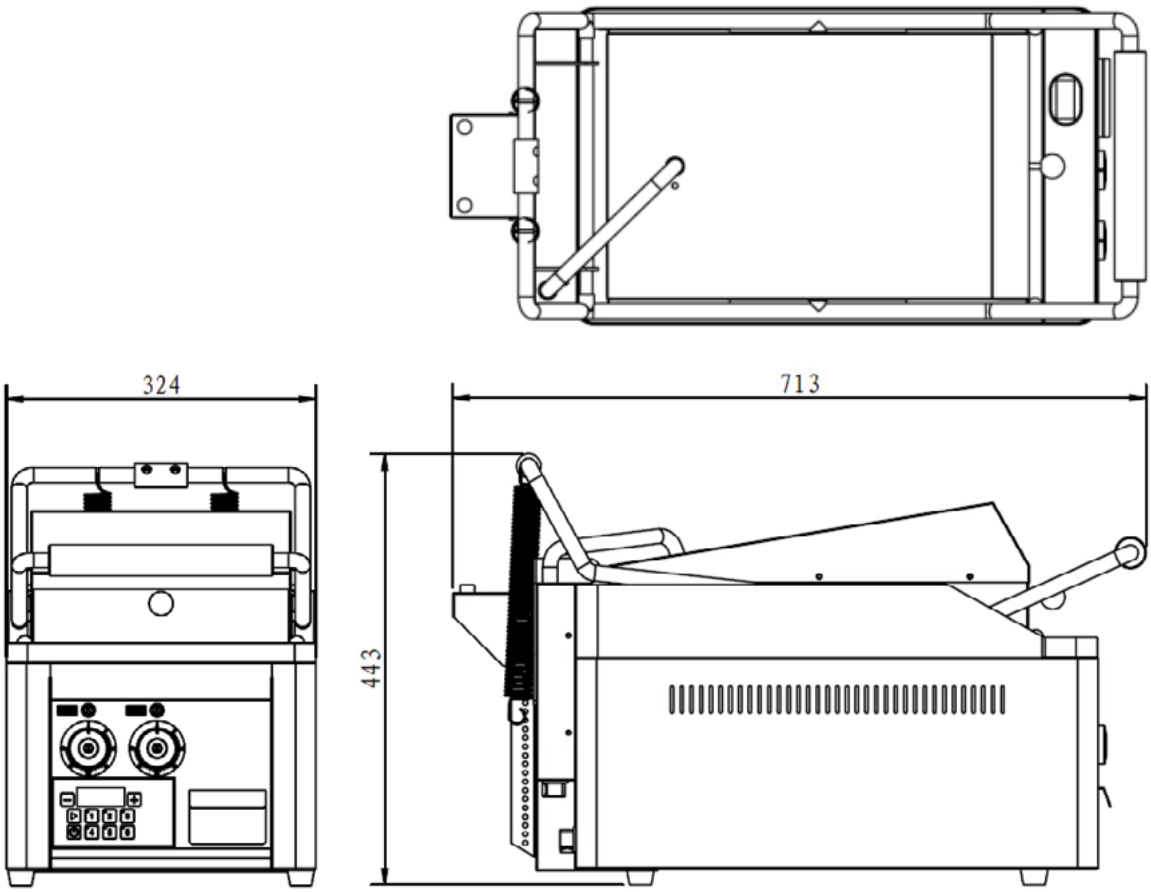

HDSECG-1

MODEL	OVERRALL DIMENSIONS	VOLTAGE	POWER	COOKING PLATE SIZE	TEMPERATURE RANGE
HDSECG-1	324x 713x 443 mm 13x 28.5x 17 inch	220–240V~, 50/60Hz, 1ph	3000 W + 3000 W	Upper W 267x D 427 x H 6 mm (11x 17x 1/4 in) Lower W 320x D 480 x H 10 mm (13x 19x 3/8 in)	Upper plate 50–220°C / 122-428°F Lower plate 50–300°C / 122-572°F

sales@heavydutysystems.com

All electric cooking equipment is supplied with a cord and plug.

Electric Griddle



HDSEG-10-22



HDSEG-10-28

STANDARD FEATURES

- Polished mild steel plate, 10mm in thickness Splash guard to prevent food spillage Stainless steel structure
- Temperature range 50-300ºC (122-572ºF) Large stainless steel oil collector with handle Bakelite knob, cool to touch
- Large opening of front grease through Stainless steel heating element Anti-slip rubber feet
- Heating and power indicator

- **Thermostats (if applicable) available in either Fahrenheit or Celsius**
- **Available in various electrical power setups (power setups available for all areas of the world)**
- **Power may vary based on specified electrical setup**

Electric Griddle

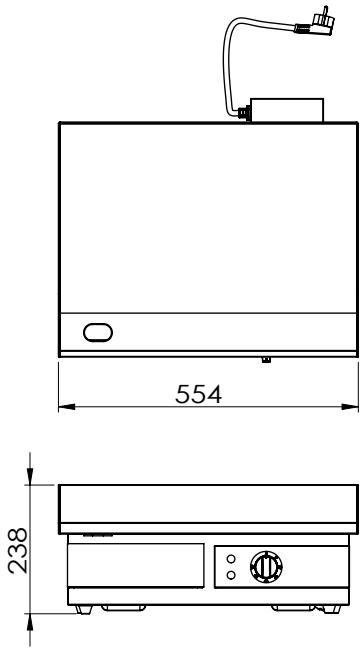

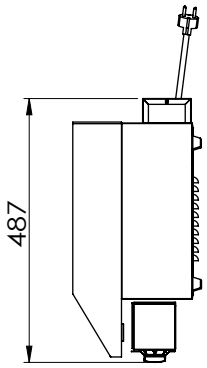

HDSEG-10-22

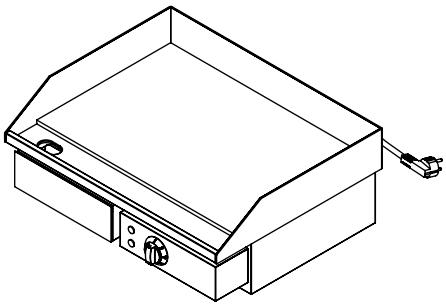

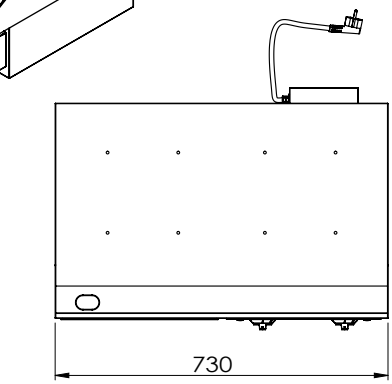

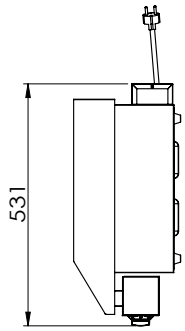

HDSEG-10-28

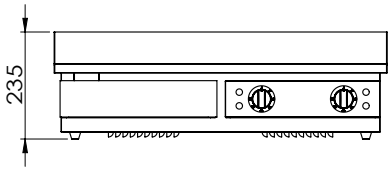

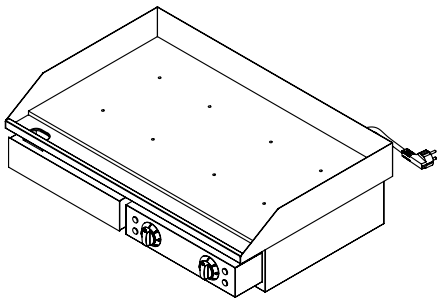

MODEL	PRODUCT (WxDxH)	POWER	COOKING SURFACE	PLATE TYPE	NW
HDSEG-10-22	550 x 450 x 230 mm 21.7 x 17.7 x 9.1 inch	3 kW	548 x 350 mm 21.5 x 13.8 inch	Flat	23 kg 51 lbs
HDSEG-10-28	730 x 500 x 230 mm 28.7 x 19.7 x 9.1 inch	4.4 kW	728 x 400 mm 28.7 x 15.7 inch	Flat	34 kg 75 lbs
HDSEG-10-28G	730 x 500 x 230 mm 28.7 x 19.7 x 9.1 inch	4.4 kW	728 x 400 mm 28.7 x 15.7 inch	1/2 Flat _ 1/2 grooved	34 kg 75 lbs

sales@heavydutysystems.com

All electric cooking equipment is supplied with a cord and plug.

Electric Griddle



HDSEG-12-22

STANDARD FEATURES

- Full stainless steel structure
- 1/2” thick steel cooking griddle plate
- Smooth bottom ensures even heat supply
- 3” high splash guard to prevent grease splatters
- Temperature control varies from 150~570°F (65°C~299 °C)
- Bakelite knob, easy to manipulate
- Stainless steel removable grease tray
- Single thermostatic control
- Mild steel plate to retain heat
- Anti slippery rubber foot

- **Thermostats (if applicable) available in either Fahrenheit or Celsius**
- **Available in various electrical power setups (power setups available for all areas of the world)**
- **Power may vary based on specified electrical setup**

Electric Griddle

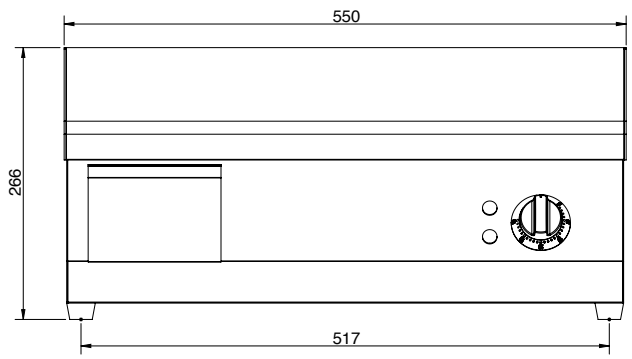

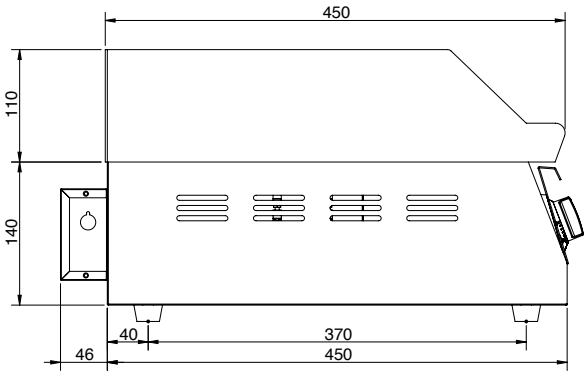

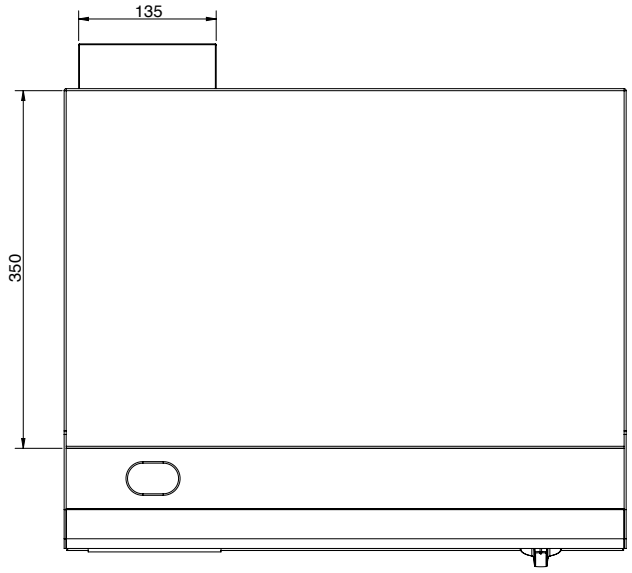

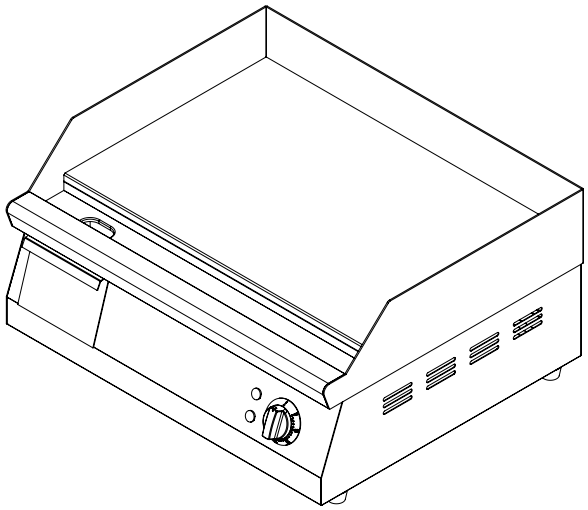

HDSEG-12-22

MODEL	PRODUCT (WxDxH)	POWER	COOKING SURFACE	PLATE TYPE	NW
HDSEG-12-10	260 x 420 x 270 mm 10 x 17 x 11 inch	1500 W	256 x 330 mm 10 x 13 inch	Flat	16.5 kg 26 lbs
HDSEG-12-16	400 x 500 x 270 mm 16 x 20 x 11 inch	3000 W	400 x 396 mm 16 x 16 inch	Flat	27.5 kg 60 lbs
HDSEG-12-22	550 x 450 x 270 mm 22 x 18 x 11 inch	3000 W	546 x 348 mm 22 x 14 inch	Flat	31 kg 68 lbs
HDSEG-12-24	610 x 500 x 270 mm 24 x 20 x 11 inch	6000 W	606 x 400 mm 24 x 16 inch	Flat	40 kg 88 lbs
HDSEG-12-30	760 x 500 x 270 mm 30 x 20 x 11 inch	6000 W	756 x 400 mm 30 x 16 inch	Flat	48 kg 106 lbs

sales@heavydutysystems.com

All electric cooking equipment is supplied with a cord and plug.

Electric Pizza Oven



HDSEPO-4-2



HDSEPO-4

STANDARD FEATURES

- Front stainless steel with high temperature black painting on sides
- EGO thermostat controlled, durable and robust
- Temperature range 30-500ºC (86~932°F)
- Durable Alloy heating element on top and bottom
- On/off switch for illuminator
- Aluminum painting panel to resist high temperature
- Power indicator
- Visual glass on the door
- Cool to touch Bakelite handle
- Hearthstone inside to make sure temperature is distributed more evenly
- Available in 4 different sizes

- **Thermostats (if applicable) available in either Fahrenheit or Celsius**
- **Available in various electrical power setups (power setups available for all areas of the world)**
- **Power may vary based on specified electrical setup**

Electric Pizza Oven

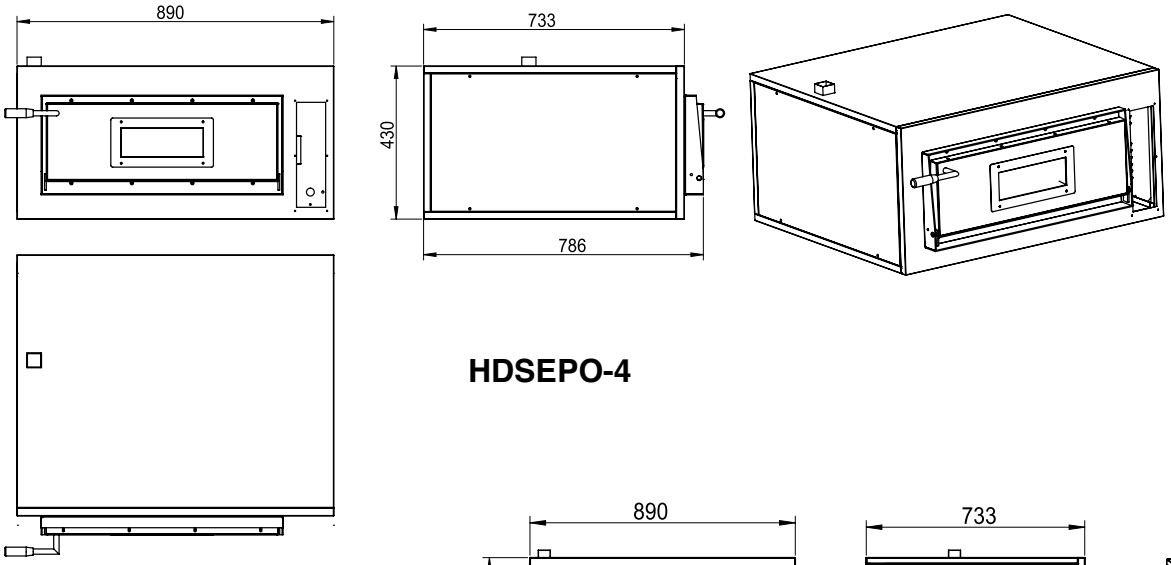

HDSEPO-4

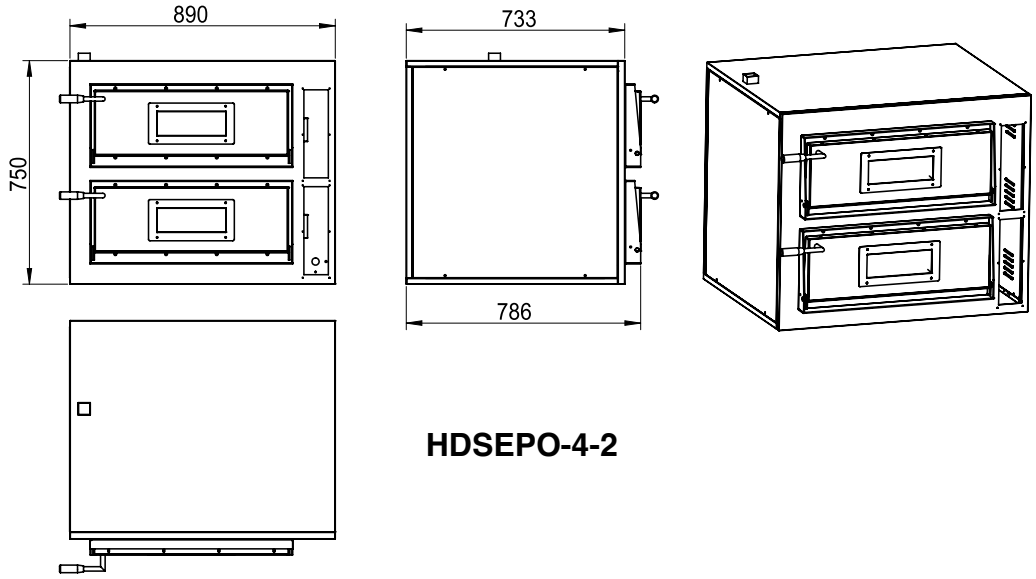

HDSEPO-4-2

MODEL	CHAMBER (WxDxH)	CAPACITY	POWER	TEMPERATURE	PRODUCT (WxDxH)	NW
HDSEPO-6-2	610 x 910 x 140 mm 24 x 36 x 6 inch	6 + 6	14.4 kW	30 - 500°C 86 - 932°F	890 x 1125 x 750 mm 35 x 44 x 30 inch	154 kg 339 lbs
HDSEPO-6	610 x 910 x 140 mm 24 x 36 x 6 inch	6	7.2 kW	30 - 500°C 86 - 932°F	890 x 1125 x 430 mm 35 x 44 x 17 inch	108 kg 238 lbs
HDSEPO-4-2	610 x 610 x 140 mm 24 x 24 x 6 inch	4 + 4	8.4 kW	30 - 500°C 86 - 932°F	910 x 820 x 750 mm 36 x 32 x 30 inch	118 kg 260 lbs
HDSEPO-4	610 x 610 x 140 mm 24 x 24 x 6 inch	4	4.2 kW	30 - 500°C 86 - 932°F	910 x 820 x 430 mm 36 x 32 x 30 inch	68 kg150 lbs

sales@heavydutysystems.com

All electric cooking equipment is supplied with a cord and plug.

Counter Top Pizza Oven



HDSEPO-19



STANDARD FEATURES

- All Stainless steel structure
- Two decks with ceramic hearth
- 3 1/4” deck height
- High heat aluminized steel baking chamber
- Durable stainless steel heating element on top and
- bottom
- Compact size for small kitchens
- Temperature range from 86°F- 680°F (30°C~360 °C)
- 15 minutes timer with bell
- Gravity door design
- Adjustable stainless steel legs
- Stainless steel handle

- **Thermostats (if applicable) available in either Fahrenheit or Celsius**
- **Available in various electrical power setups (power setups available for all areas of the world)**
- **Power may vary based on specified electrical setup**

Counter Top Pizza Oven

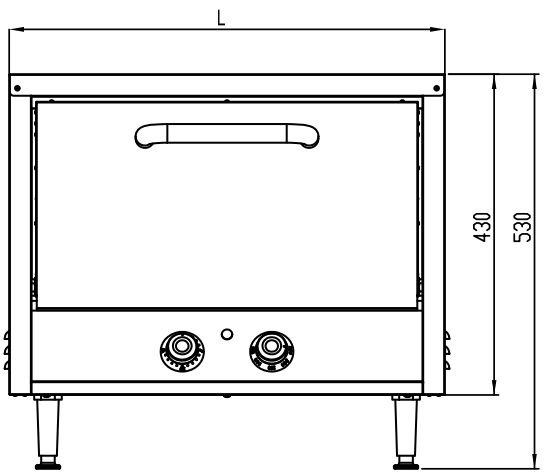

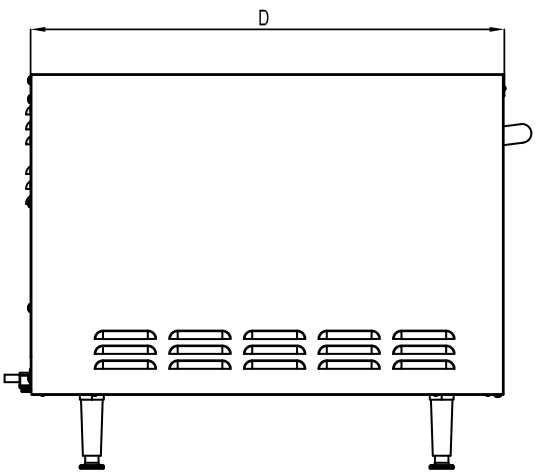

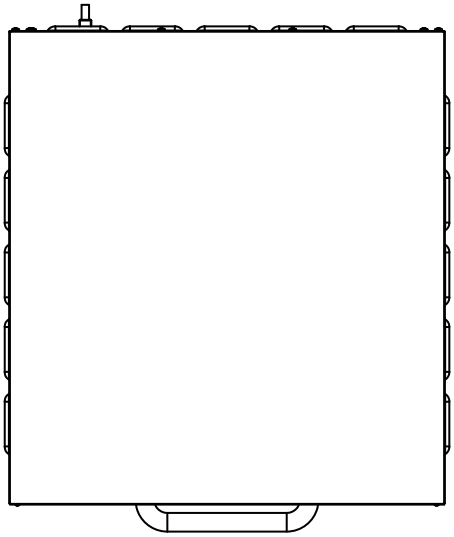

HDSEPO-19： L=584 D=635
HDSEPO-22： L=660 D=711

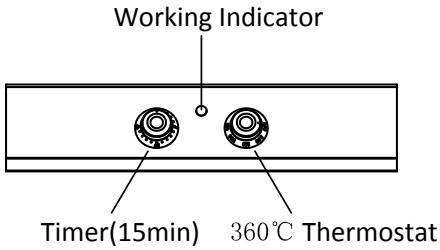

MODEL	CHAMBER (WxDxH)	CAPACITY	POWER	TEMPERATURE	PRODUCT (WxDxH)	NW
HDSEPO-19	489 x 476 x 241 mm 19.3 x 18.7 x 10 inch	2	2850 W	30 - 360°C 86 - 680°F	584 x 635x 530 mm 23 x 25 x 21 inch	55 kg 121 lbs
HDSEPO-22	565 x 552 x 241 mm 22.2 x 22 x 10 inch	2	3600 W	30 - 360°C 86 - 680°F	660 x 711 x 530 mm 26 x 28 x 21 inch	79 kg 174 lbs

sales@heavydutysystems.com

All electric cooking equipment is supplied with a cord and plug.

7” Round Shaped Waffle Baker



HDSWBC-7

STANDARD FEATURES

- Cast aluminum plate with Teflon coating
- An output of 20 Belgian waffle in one hour Stainless steel structure
- Temperature range 124-230ºC (255-446ºF) Waffle thickness can be 1.25” (3cm)
- 18cm diameter plate
- Rotating plate for better batter distribution Stainless steel heating element on both sides Rock on/off switch with illuminator
- PCB control with precise temperature and time setting
- Buzzer would beep after time is up
- Anti-slip rubber feet
- Stainless steel crumb collector
- Bakelite handle, cool to touch

- **Thermostats (if applicable) available in either Fahrenheit or Celsius**
- **Available in various electrical power setups (power setups available for all areas of the world)**
- **Power may vary based on specified electrical setup**

7” Round Shaped Waffle Baker

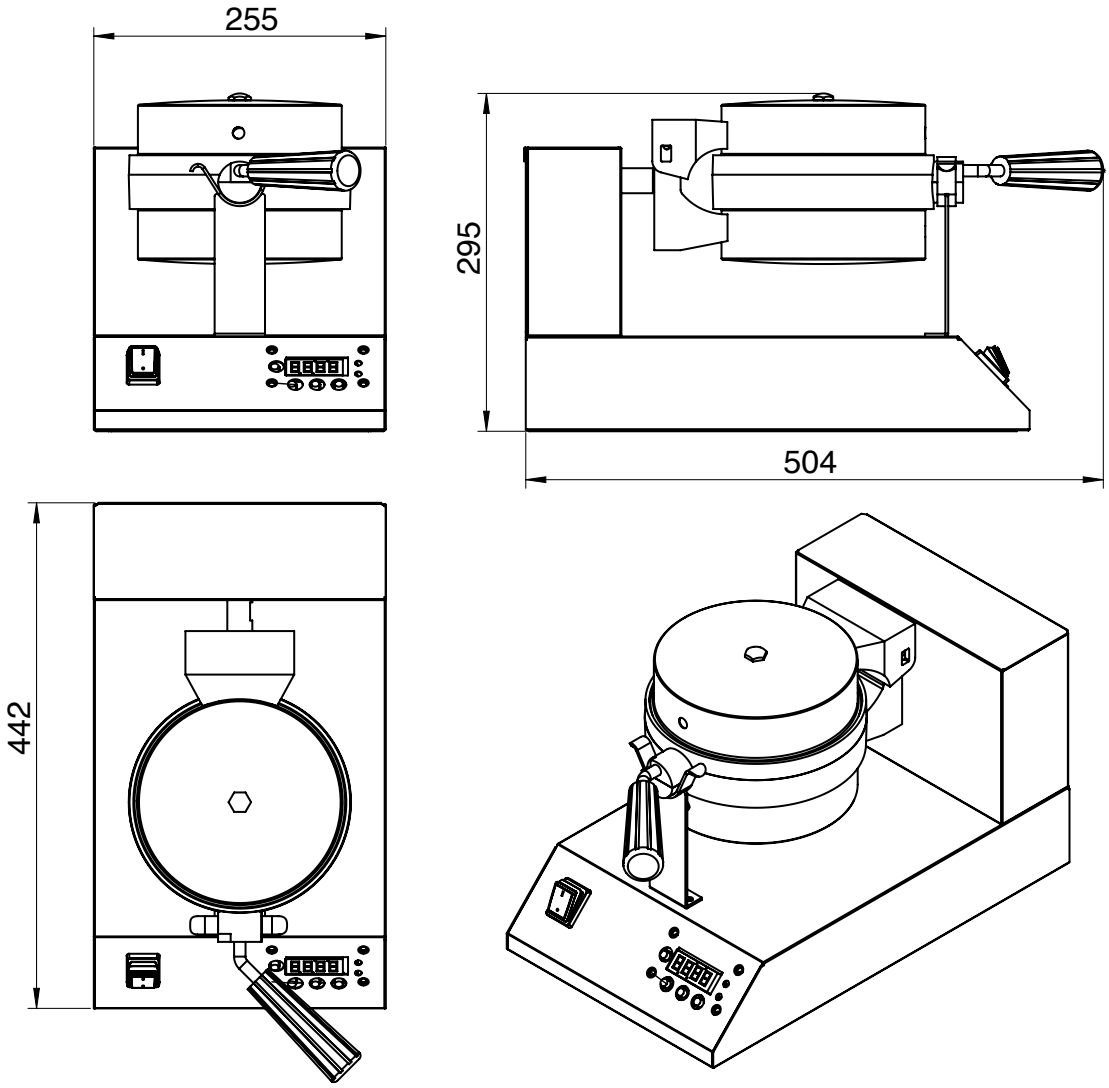

HDSWBC-7

MODEL	PRODUCT (WxDxH)	PLATE TYPE	COOKING SIZE	POWER	NW
HDSWBC-7	255 x 440 x 320 mm 10 x 17 x 13 inch	Round	Dia. 180 mm Dia. 7 inch	1000 W	11 kg 24 lbs

sales@heavydutysystems.com

All electric cooking equipment is supplied with a cord and plug.

7” Rectangular Shaped Waffle Baker



HDSWBR-7

STANDARD FEATURES

- Cast iron plate with ceramic coating
- Designed to produce two pieces of 7x4” square pattern waffles
- An output of 30 Belgian waffle in one hour Stainless steel structure
- Temperature range 50-320°C (122-608°F) Waffle thickness can be 1.” (2.3cm)
- Top plate opens up to 90°
- EGO thermostat
- Stainless steel heating element on both sides Cast iron plate to hold heat longer
- A golden waffle can be done in just 2 minutes Anti-slip rubber feet
- Wire brush for easy cleaning
- Bakelite handle for frame, cool to touch

- **Thermostats (if applicable) available in either Fahrenheit or Celsius**
- **Available in various electrical power setups (power setups available for all areas of the world)**
- **Power may vary based on specified electrical setup**

7” Rectangular Shaped Waffle Baker

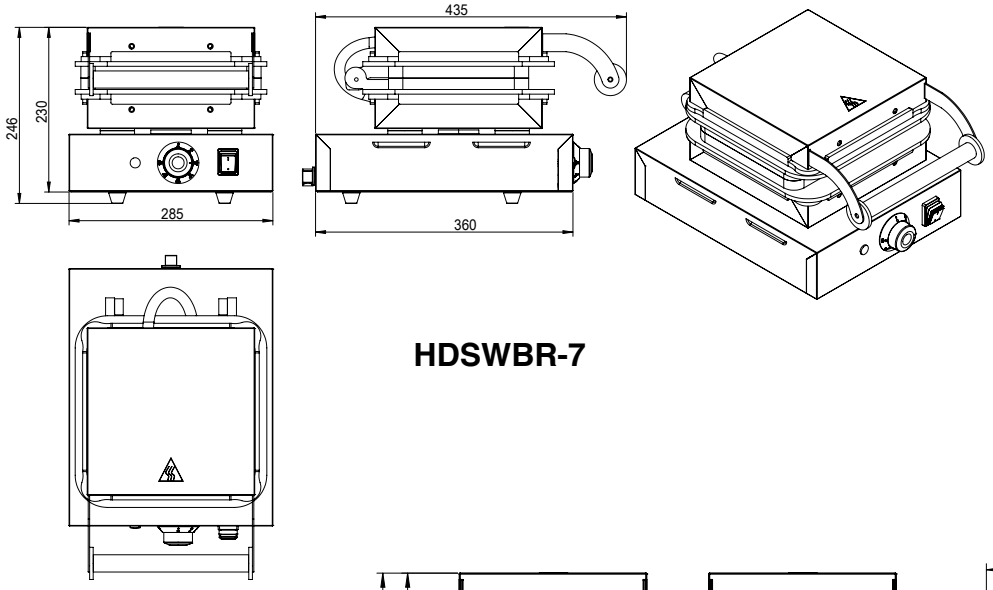

HDSWBR-7

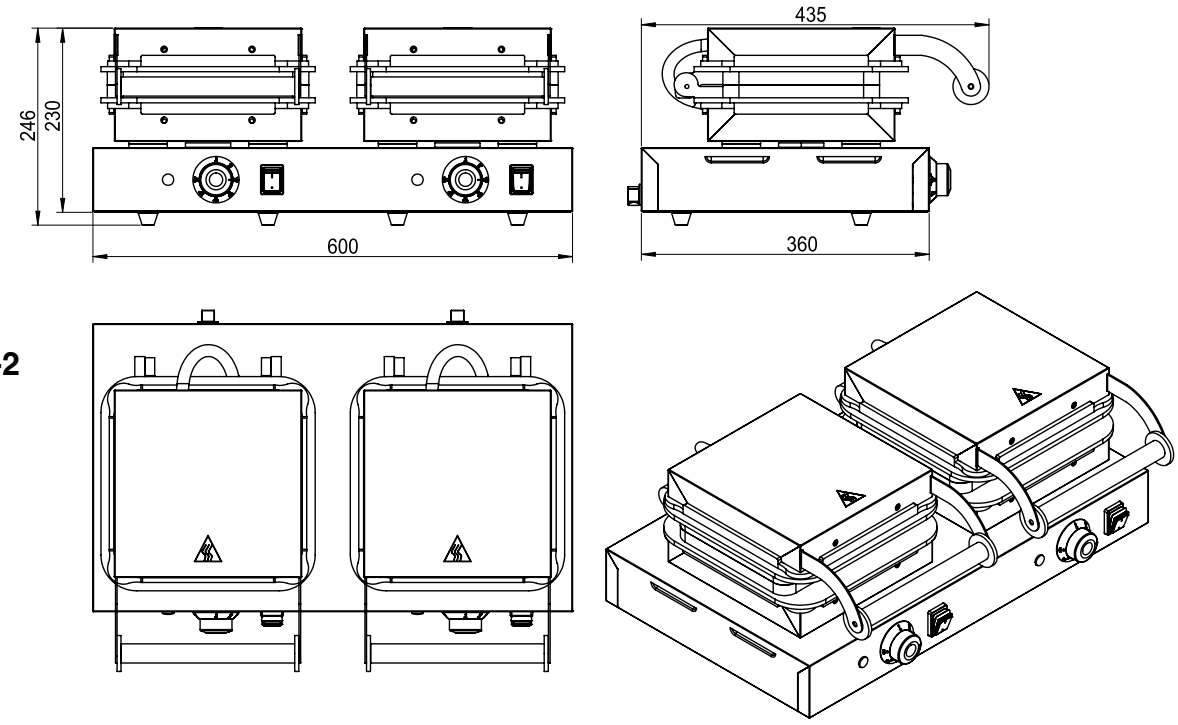

HDSWBR-7-2

MODEL	PRODUCT (WxDxH)	PLATE TYPE	COOKING SIZE	POWER	NW
HDSWBR-7	285 x 360 x 220 mm 11 x 14 x 9 inch	Rectangular	165 x 105 mm 7 x 4 inch	2200 W	16 kg 35 lbs
HDSWBR-7-2	600 x 360 x 220 mm 24 x 14 x 9 inch	Rectangular	165 x 105 mm 7 x 4 inch	2 x 2200 W	30 kg 66 lbs

sales@heavydutysystems.com

All electric cooking equipment is supplied with a cord and plug.

Heart Shaped Waffle Baker



HDSWBH-8

STANDARD FEATURES

- Cast iron plate with ceramic coating
- Designed to produce five pieces of heart shaped pattern waffles
- An output of 30 Belgian waffle in one hour Stainless steel structure
- Temperature range 50-320°C (122-60°F) Waffle thickness can be 1” (2.3cm)
- Top plate opens up to 90°
- EGO thermostat
- Stainless steel heating element on both sides Cast iron plate to hold heat longer
- A golden waffle can be done in just 2 minutes Anti-slip rubber feet
- Wire brush for easy cleaning
- Bakelite handle for frame, cool to touch

- **Thermostats (if applicable) available in either Fahrenheit or Celsius**
- **Available in various electrical power setups (power setups available for all areas of the world)**
- **Power may vary based on specified electrical setup**

Heart Shaped Waffle Baker

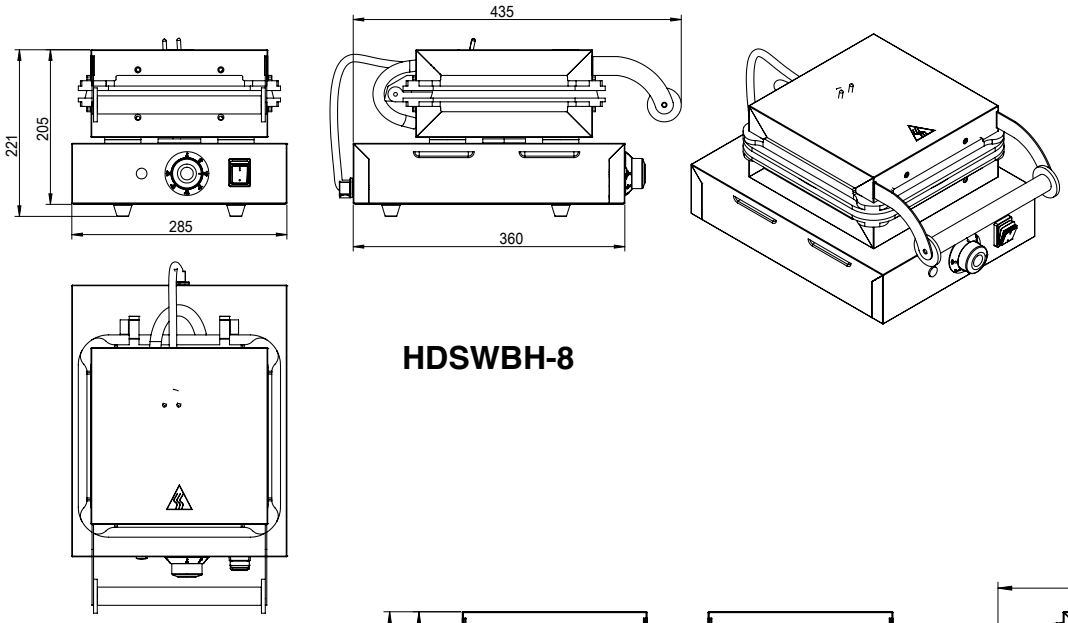

HDSWBH-8

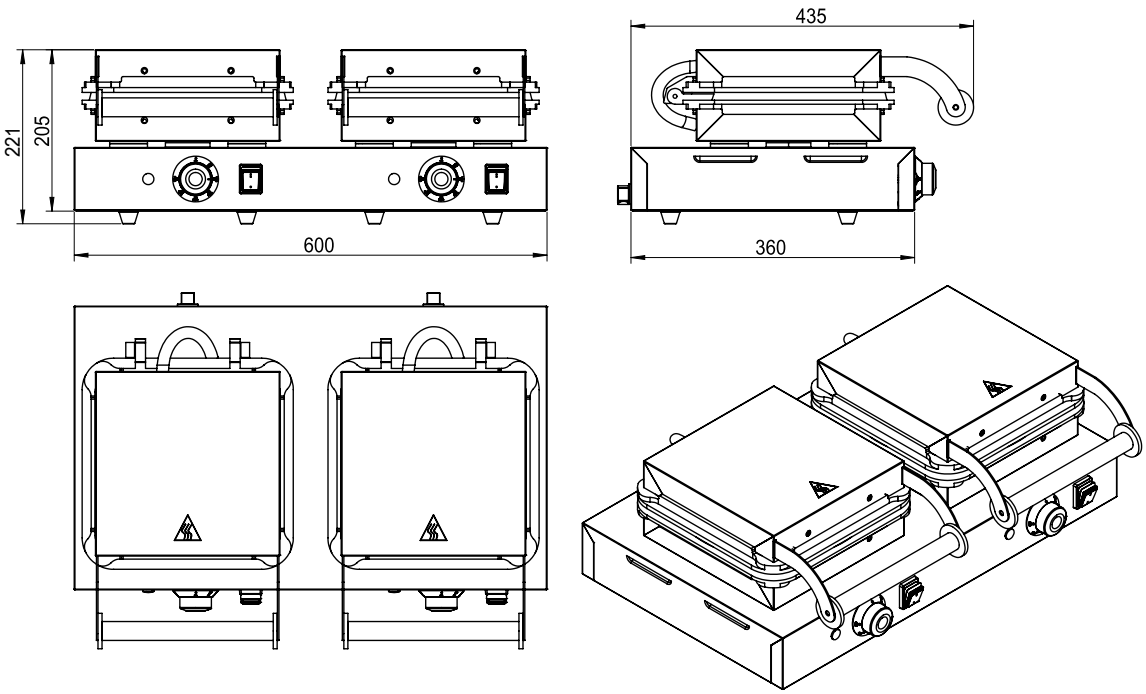

HDSWBH-8-2

MODEL	PRODUCT (WxDxH)	PLATE TYPE	COOKING SIZE	POWER	NW
HDSWBH-8	285 x 360 x 220 mm 11 x 14 x 9 inch	Heart shape	Dia. 210 mm Dia. 8 inch	2200 W	11 kg 24 lbs
HDSWBH-8-2	600 x 360 x 220 mm 24 x 14 x 9 inch	Heart shape	Dia. 210 mm Dia. 8 inch	2 x 2200 W	30 kg 66 lbs

sales@heavydutysystems.com

All electric cooking equipment is supplied with a cord and plug.

Quartz Tube Toaster



HDSQT-1



HDSQT-1A



HDSQT-2



Quartz Tube

STANDARD FEATURES

- Mirror polished stainless steel structure, easy to clean
- Infrared quartz tube for rapid heating
  - Temperature can reach maximum within 30 seconds
- Selection switch to control different groups of heating
- Protection grid to protect quartz tube
- • Wire grid to support food
- 15 minutes timer
- Insulation on three sides (Top, Left, Right)
- Mirror polished chamber to improve heating efficiency
- Cools down in seconds once shut off
- Stainless steel crumb collector with handle
- Anti-slip rubber feet
- Removable stainless steel crumb collector
- Optional tongs

- **Thermostats (if applicable) available in either Fahrenheit or Celsius**
- **Available in various electrical power setups (power setups available for all areas of the world)**
- **Power may vary based on specified electrical setup**

Quartz Tube Toaster

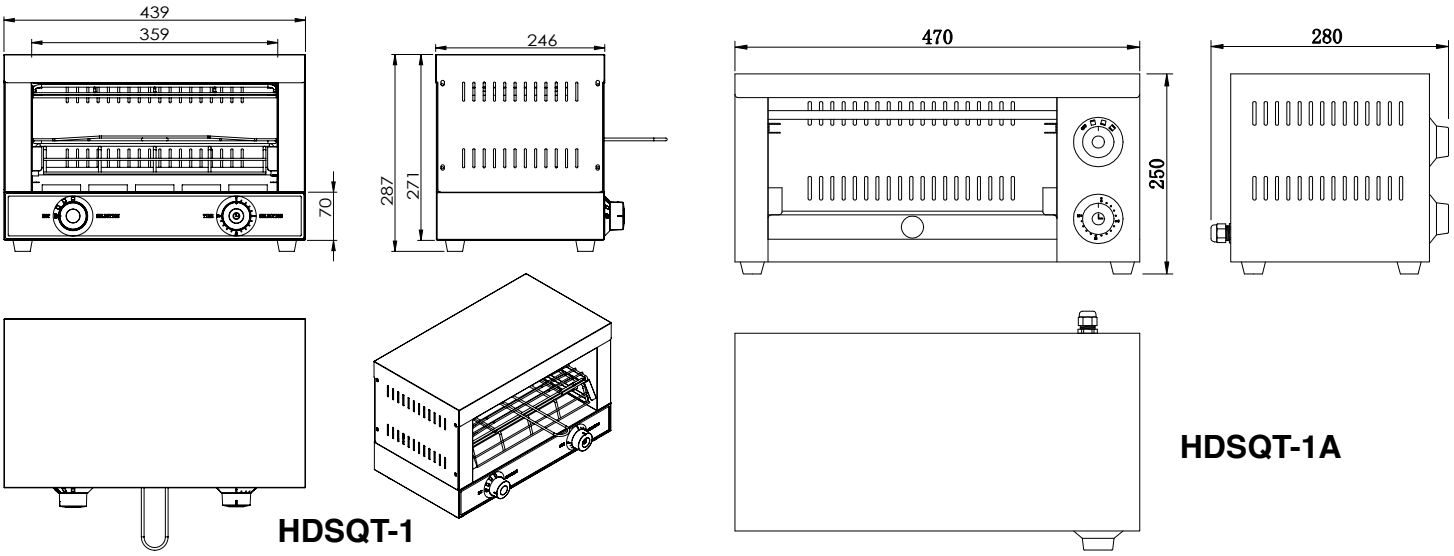

HDSQT-1

HDSQT-1A

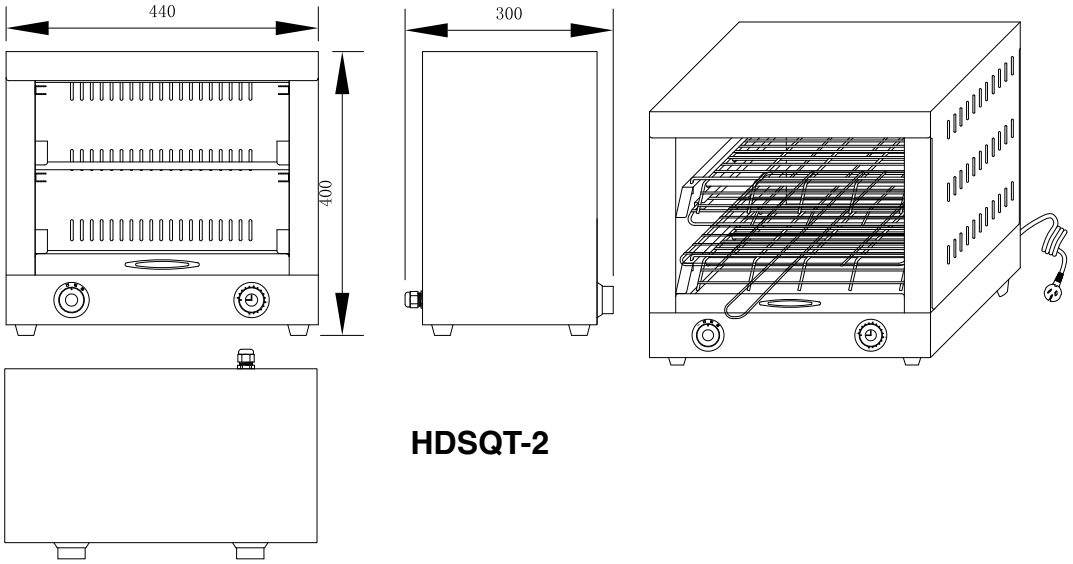

HDSQT-2

MODEL	LAYER	TIMER	POWER	PRODUCT (WxDxH)	NW
HDSQT-2	Double	15 min.	3000 W	440 x 300 x 400 mm 17 x 12 x 16 inch	10.2 kg 22 lbs
HDSQT-1	Single	15 min.	1700 W	440 x 300 x 290 mm 17 x 12 x 11 inch	7.8 kg 17 lbs
HDSQT-2A	Double	15 min.	3000 W	470 x 280 x 360 mm 19 x 11 x 14 inch	10.2 kg 22 lbs
HDSQT-1A	Single	15 min.	1700 W	470 x 280 x 250 mm 19 x 11 x 10 inch	7.8 kg 17 lbs

sales@heavydutysystems.com

All electric cooking equipment is supplied with a cord and plug.

Banquet Cart



HDSBC-10



HDSBC-22



HDSBC-44

STANDARD FEATURES

- HDSBC-10
- Stainless steel structure
- Good insulation to improve holding efficiency
- 110ºC (230ºF) EGO thermostat controlled, durable and robust
- Temperature display on top to read holding temperature
- Water-proof on/off switch
- Double durable stainless steel round heating element
- Forced air circulation with special baffle plate
- Stainless steel lock
- Four swivel heavy duty 6” castors with brake
- Bumpers all around to provide better protection while transportation
- Recessed hand-grasping handle on both sides Rubber seal on the doors
- Bottom water tray to keep food humidity when needed
- GN2/1 wire grid
- Available in 3 different sizes

- **Thermostats (if applicable) available in either Fahrenheit or Celsius**
- **Available in various electrical power setups (power setups available for all areas of the world)**
- **Power may vary based on specified electrical setup**

Banquet Cart

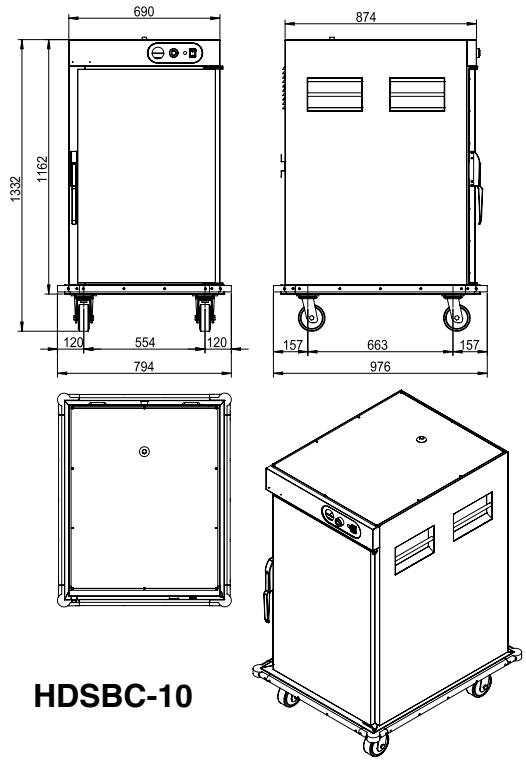

HDSBC-10

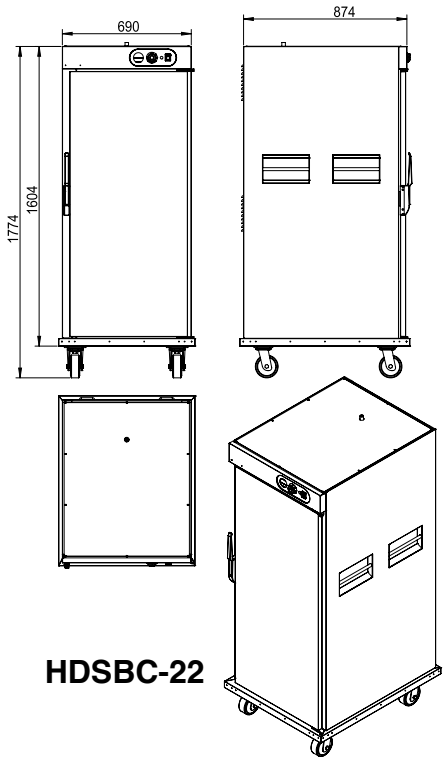

HDSBC-22

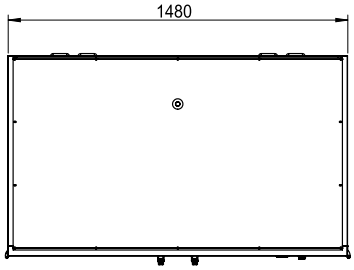

HDSBC-44

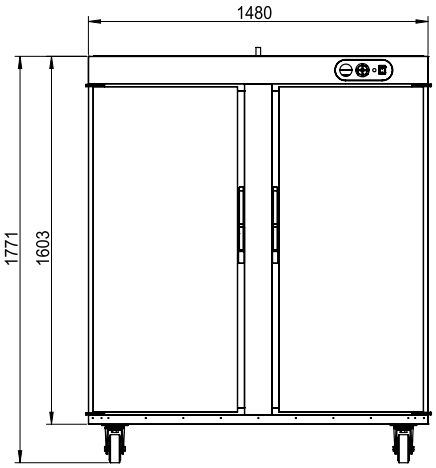

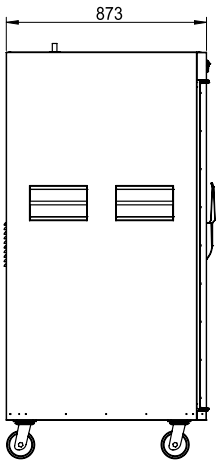

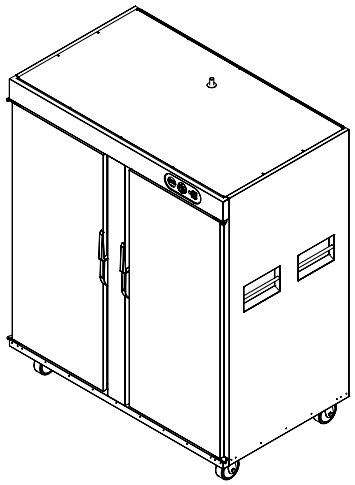

MODEL	CAPACITY	POWER	TEMPERATURE	PRODUCT (WxDxH)	NW
HDSBC-10	10 x GN 1/1	2570 W	30 - 110°C 86 - 230°F	780 x 960 x 1355 mm 31 x 38 x 53 inch	145 kg 319 lbs
HDSBC-22	22 x GN 1/1	2570 W	30 - 110°C 86 - 230°F	780 x 960 x 1755 mm v31 x 38 x 69 inch	182 kg 400 lbs
HDSBC-44	44 x GN 1/1	2570 W	30 - 110°C 86 - 230°F	1540 x 960 x 1755 mm 61 x 38 x 69 inch	318 kg 700 lbs

sales@heavydutysystems.com

All electric cooking equipment is supplied with a cord and plug.

Pass Through Mobile Holding Cabinet



HDSHC-7



HDSHC-14

STANDARD FEATURES

- All stainless steel structure
- Front and back swing doors, pass through glass doors
- On/off power switch
- Digital thermostat
- Water pan on top to add humidity
- Four casters with brake
- Two powerful, high efficient fans
- Self-closing doors for heat retention
- Magnetic door gaskets provide maximum sealing
- Half-size footprint — 7 removable tray racks for 18” x 26” American-standard trays
- Two blowers on top for hot air circulation
- Self-locking latch; water reservoir on top to add humidity

- **Thermostats (if applicable) available in either Fahrenheit or Celsius**
- **Available in various electrical power setups (power setups available for all areas of the world)**
- **Power may vary based on specified electrical setup**

Pass Through Mobile Holding Cabinet

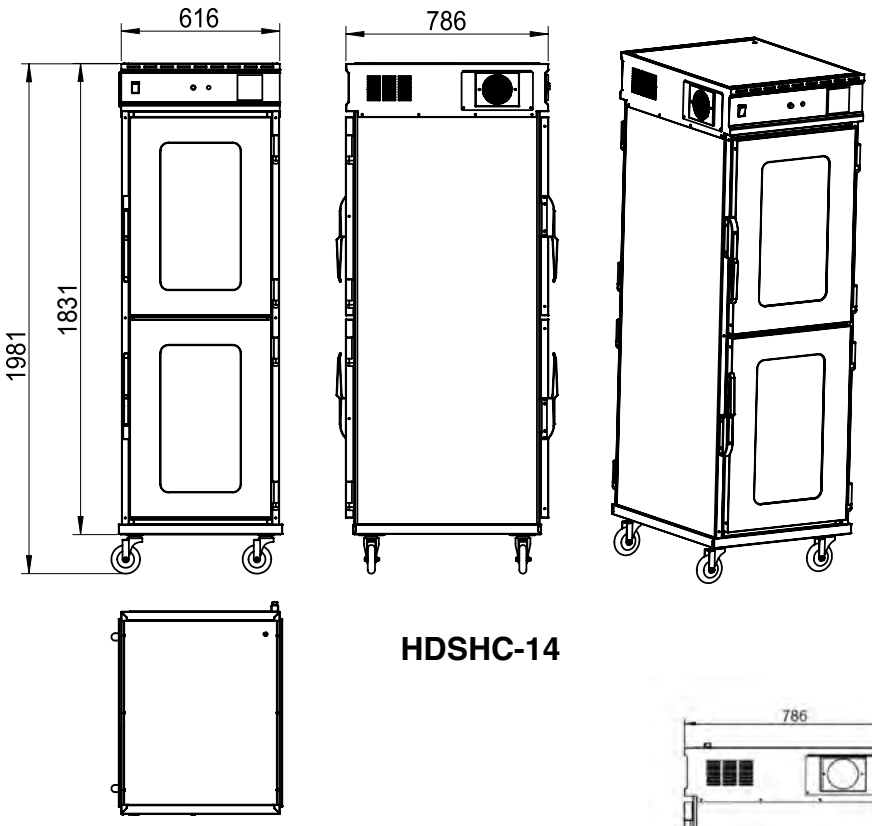

HDSHC-14

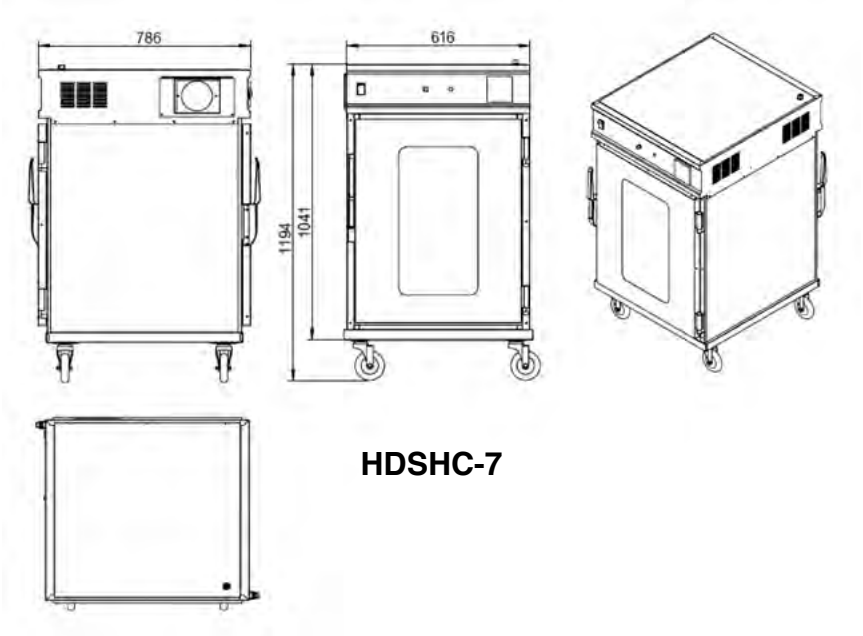

HDSHC-7

MODEL	PRODUCT (WxDxH)	POWER 220–240V	POWER 115V/ 60HZ	LEVELS	PAN SIZE	GW	NW
HDSHC-7	616 x 786 x 1194 mm 24.25 x 31 x 47 in	2 kW	1,750 W	7	457 x 660 x 25 mm 18 x 26 x 1 inch	153 Kg 337 lbs	138 Kg 304 lbs
HDSHC-14	616 x 786 x 1981 mm 24.25 x 31 x 78 in	2 kW	1,750 W	14	457 x 660 x 25 mm 18 x 26 x 1 inch	211 Kg 465 lbs	193 kg 425 lbs

sales@heavydutysystems.com

All electric cooking equipment is supplied with a cord and plug.

Electric French Fries Station



HDSFFB-40

STANDARD FEATURES

- Stainless steel structure
- Infrared ceramic heaters on top
- Heating bulbs on top
- Heating strip at the bottom of the pan
- Mirror polished radiant plate against heater to improve efficiency
- Dumping pan partition to separate different food
- Dumping pan and wire rack can be interchanged
- Cabinet underneath
- Perforated pan for drainage of Fries grease
- Stainless steel adjustable legs
- Front stainless steel box and GN pans

- **Thermostats (if applicable) available in either Fahrenheit or Celsius**
- **Available in various electrical power setups (power setups available for all areas of the world)**
- **Power may vary based on specified electrical setup**

Electric French Fries Station

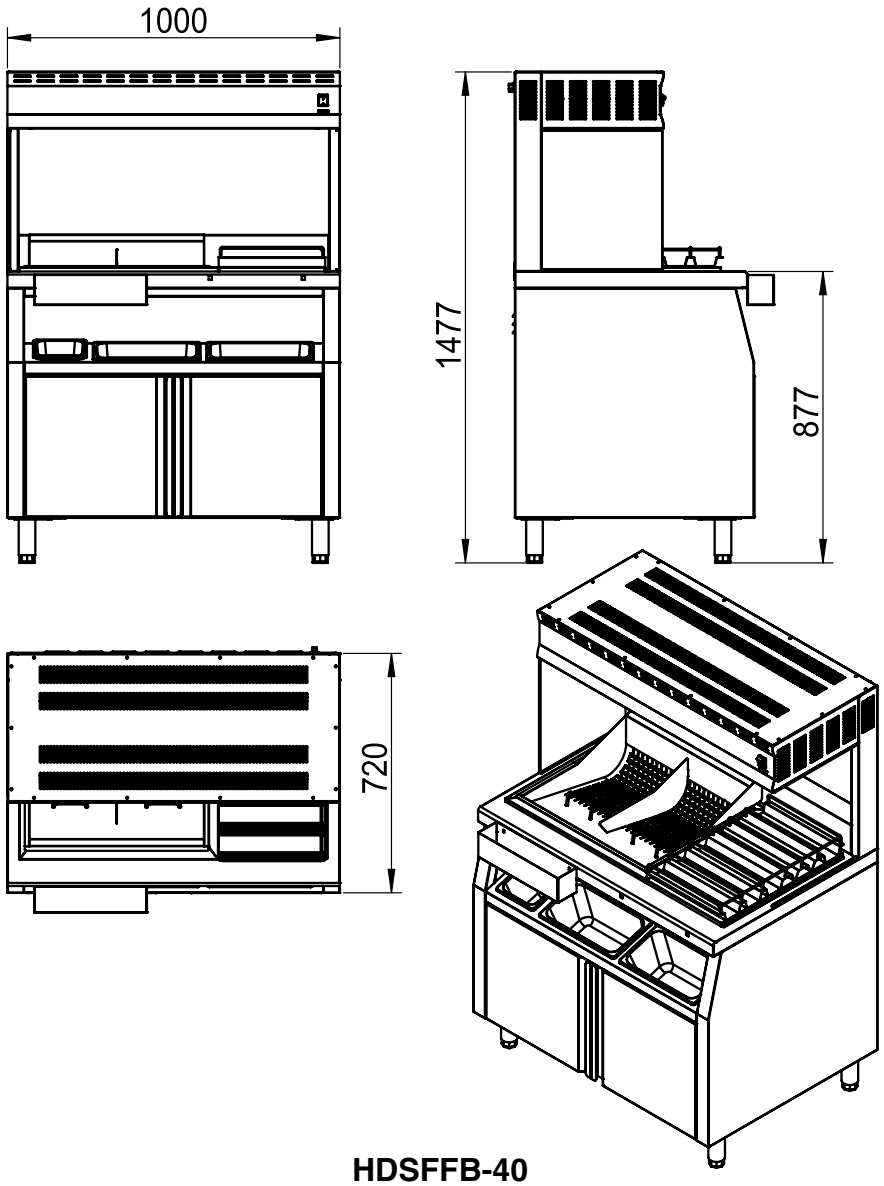

HDSFFB-40

MODEL	PRODUCT (WxDxH)	PAN HEATER	LAMP	POWER	NW
HDSFFB-40	1010 x 720 x 1500 mm 40 x 28 x 59 inch	60 W	40 W	1100 W	85 kg 187 lbs

sales@heavydutysystems.com

All electric cooking equipment is supplied with a cord and plug.

Chicken Breading Station



HDSCBS-1A / HDSCBS-1B.



STANDARD FEATURES

- Stainless steel structure
- Powerful brush motor
- Removable brush blender and sifter screen
- Start/stop button for brush motor
- Wire grid for resting food after breading
- Bottom dough ball pan and flour collection pan
- Includes dipping basket and bowl
- Indicator lights shows operation status
- Available in two configurations: dipping bowls at the front (HDSCBS-1B) or at the sides (HDSCBS-1A)
- Four 4’ brake casters

- **Automatic flour sifting system — separates and recycles breading, cuts flour waste**
- **Purpose-built for fried-chicken and breaded-product operations**
- **Two sizes: 900mm (HDSCBS-1A) and 1220mm (HDSCBS-1B)**

Chicken Breading Station

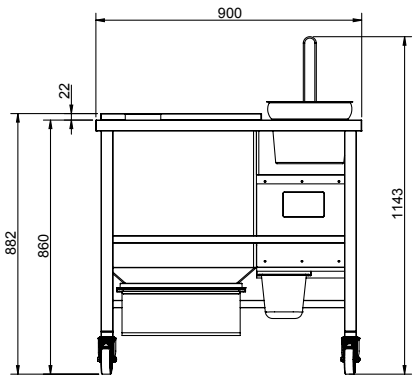

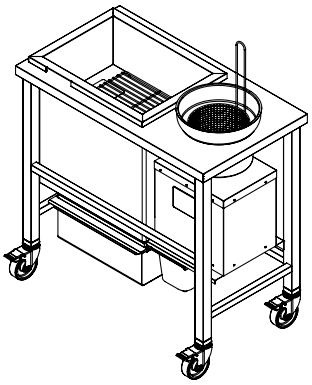

HDSCBS-1A

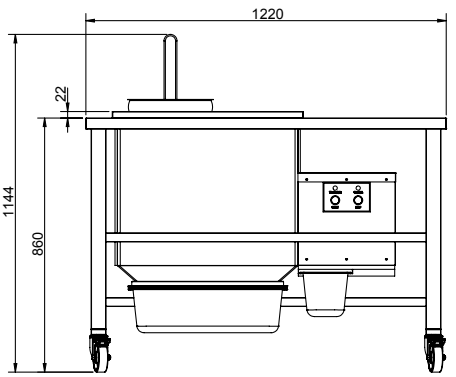

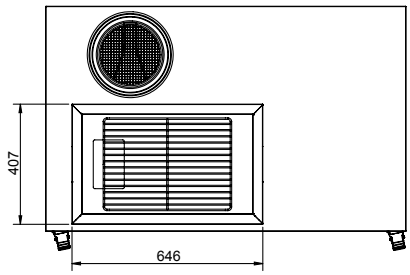

HDSCBS-1B

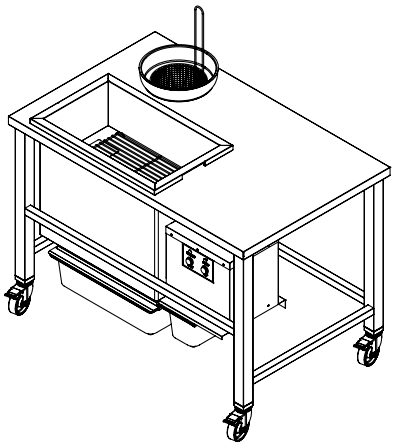

MODEL	DESCRIPTION	PRODUCT (WxDxH)	POWER	Packing (WxDxH)
HDSCBS-1A	Breading table with sifting system	900 x 500 x 860 mm 35x 20x 34 inch	200W / 220–240V / 50–60Hz	920x 520x 910mm 36x 20x 36 inch
HDSCBS-1B	Breading table with sifting system	1220 x 762 x 860 mm 48x 30x 34 inch	200W / 220–240V / 50–60Hz	1250x 790x 910 mm 49x 31x 36 inch

sales@heavydutysystems.com

All electric cooking equipment is supplied with a cord and plug.

Hot Counter Warmer



HDSFWP-3



HDSFWP-5

STANDARD FEATURES

- Stainless steel heating element at the bottom
- Mirror polished stainless steel structure
- Thermostat controlled, durable and robust
- Circuit breaker to protect electrical components
- Spot light on top for better view of food displayed
- Three sides colored posters to attract customer
- Temperature display on top to monitor inside temperature
- Light switch with green indicator, heating indicator
- Swing door for easy opening, anti slippery rubber foot
- Cool to touch Bakelite handle on door
- Sloped shelf for better view from customer

- **Thermostats (if applicable) available in either Fahrenheit or Celsius**
- **Available in various electrical power setups (power setups available for all areas of the world)**
- **Power may vary based on specified electrical setup**

Hot Counter Warmer

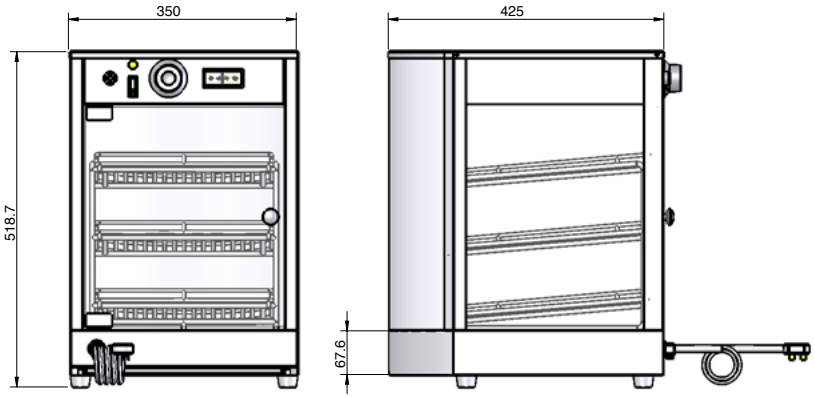

HDSFWP-3

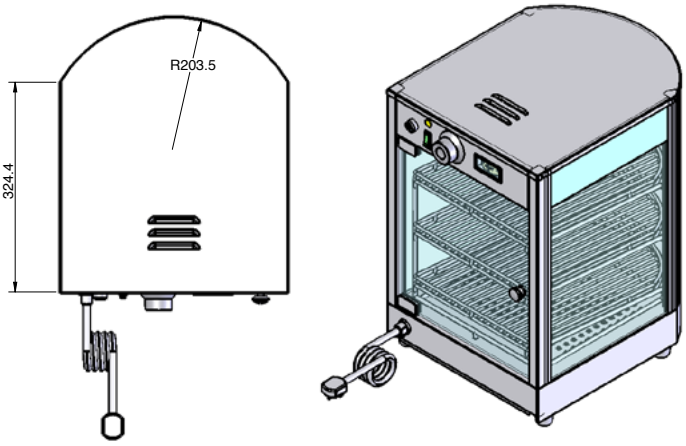

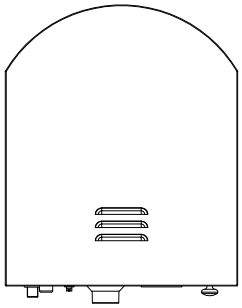

HDSFWP-5

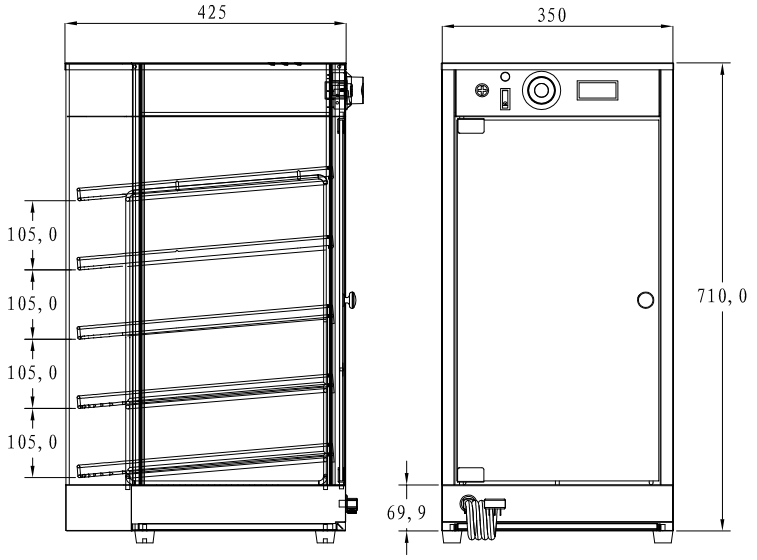

MODEL	PRODUCT (WxDxH)	LEVEL	TEMPERATURE	POWER	NW
HDSFWP-3	350 x 425 x 500 mm 14 x 17 x 20 inch	3	30 - 85°C 86 - 185°F	850 W	16 kg 35 lbs
HDSFWP-5	350 x 425 x 710 mm 14 x 17 x 28 inch	5	30 - 85°C 86 - 185°F	850 W	17 kg 37 lbs

sales@heavydutysystems.com

All electric cooking equipment is supplied with a cord and plug.

Hot Display Case



HDSHDC-22



HDSHDC-22-2

STANDARD FEATURES

- HDSHDC-22
- Toughened glass sides and door, curved glass in front
- Stainless steel bottom
- Thermostat control, durable and robust
- Hi limiter to protect electrical components
- Cool to touch plastic handle
- Water reservoir at the bottom to add humidity when needed
- Extra deep reservoir GN1/9 x 2.5” to last for whole day
- Inside chamber to be GN1/1 size
- Rubber seal between front and side glass to prevent heat loss
- Anti-slip rubber feet
- Heating indicator
- Available in single and double levels

- **Thermostats (if applicable) available in either Fahrenheit or Celsius**
- **Available in various electrical power setups (power setups available for all areas of the world)**
- **Power may vary based on specified electrical setup**

Hot Display Case

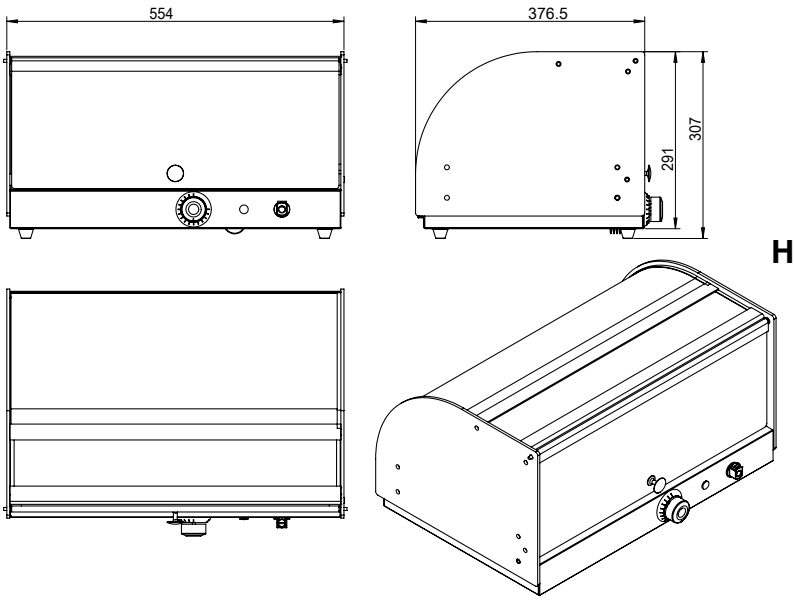

HDSHDC-22

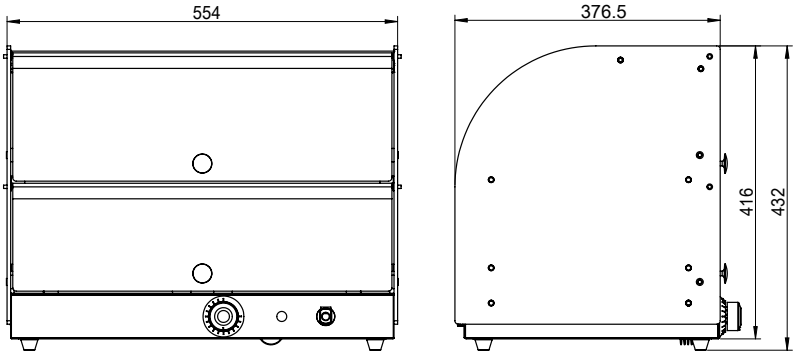

HDSHDC-22-2

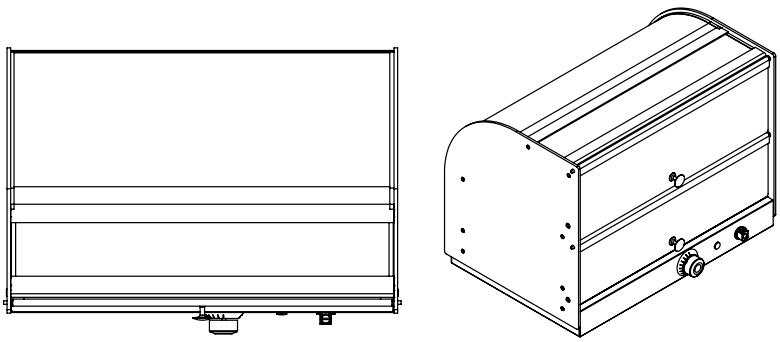

MODEL	PRODUCT (WxDxH)	LEVEL	TEMPERATURE	POWER	NW
HDSHDC-22	560 x 395 x 310 mm 22 x 16 x 12 inch	1	30 - 85°C 86 - 185°F	300 W	13 kg 29 lbs
HDSHDC-22-2	560 x 395 x 430 mm 22 x 16 x 17 inch	2	30 - 85°C 86 - 185°F	500 W	19 kg 42 lbs

sales@heavydutysystems.com

All electric cooking equipment is supplied with a cord and plug.

Hot Display Case



HDSHD-26

STANDARD FEATURES

- Toughened glass all sides
- Thermostat controlled, durable and robust
- Analogue temperature display
- Temperature range 30-90°C (86-194° F)
- Cool to touch Bakelite handle
- Water reservoir at the bottom to add humidity when needed
- Extra deep reservoir GN1/9 x 2.5” to last for whole day
- (3) Adjustable shelves
- Sliding doors
- Rubber seal between door and frame to prevent heat loss
- Vertical fluorescent lamp on both sides to better highlight food
- Filament lamp on top for advertising posters to attract customer
- On/off switch for lamps
- Anti-slip rubber feet
- Heating indicator

- **Thermostats (if applicable) available in either Fahrenheit or Celsius**
- **Available in various electrical power setups (power setups available for all areas of the world)**
- **Power may vary based on specified electrical setup**

Hot Display Case

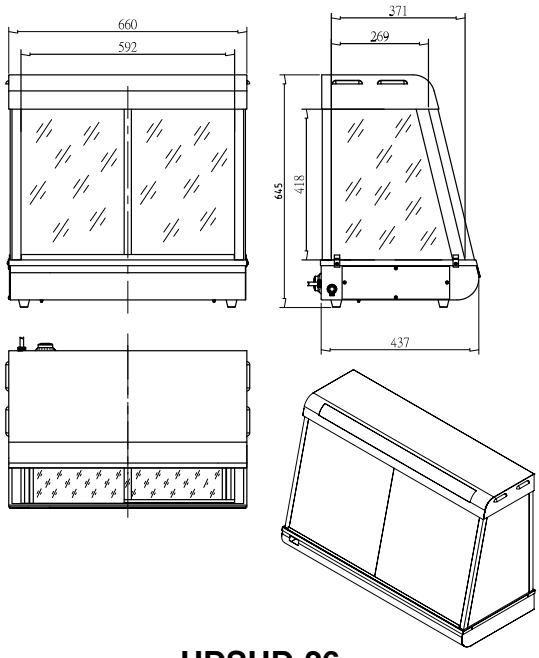

HDSHD-26

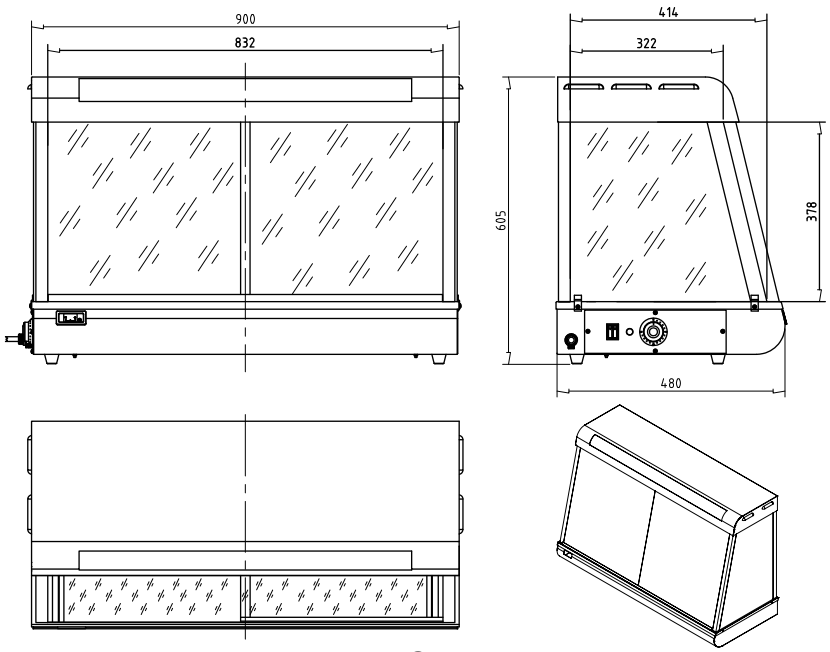

HDSHD-36

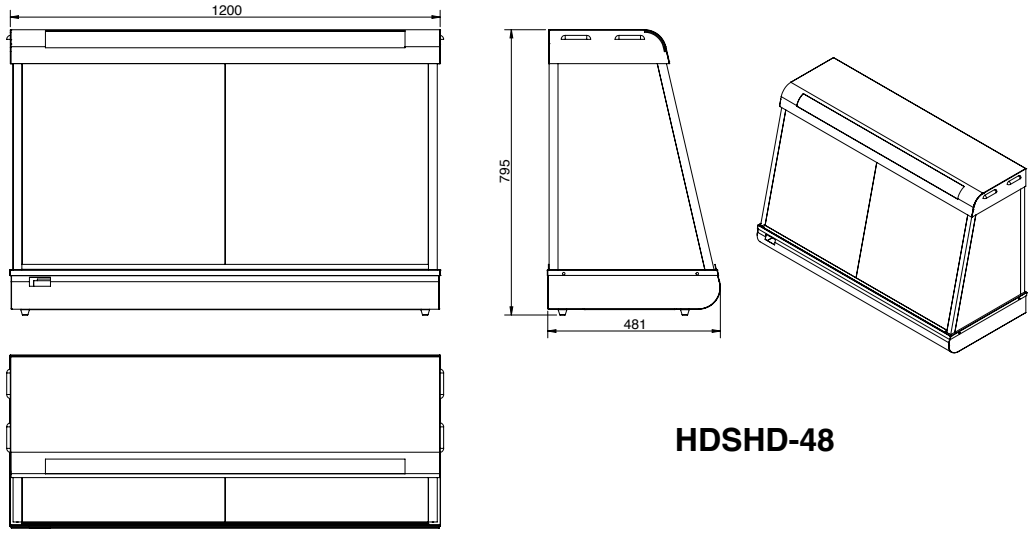

HDSHD-48

MODEL	CAPACITY	POWER	SHELF SIZE	PRODUCT (WxDxH)	NW
HDSHD-26	110 L	1840 W	580 x 275 mm / 23 x 11 inch 580 x 298 mm / 23 x 12 inch 580 x 318 mm / 23 x 13 inch	660 x 437 x 655 mm 26 x 17 x 26 inch	35 kg 77 lbs
HDSHD-36	150 L	1840 W	820 x 315 mm / 32 x 12 inch 820 x 340 mm / 32 x 13 inch 820 x 360 mm / 32 x 14 inch	900 x 480 x 590 mm 35 x 19 x 23 inch	50 kg 110 lbs
HDSHD-48	370 L	2200 W	1120 x 315 mm / 44 x 12 inch 1120 x 340 mm / 44 x 13 inch 1120 x 360 mm / 44 x 14 inch	1200 x 480 x 810 mm 47 x 19 x 32 inch	72 kg 158 lbs

sales@heavydutysystems.com

All electric cooking equipment is supplied with a cord and plug.

Hot Display Case



HDSHDN-36

STANDARD FEATURES

- Toughened glass all sides
- Thermostat controlled, durable and robust
- Analogue temperature display
- Temperature range 30-90°C (86-194° F)
- Cool to touch Bakelite handle
- Water reservoir at the bottom to add humidity when needed
- Extra deep reservoir GN1/9 x 2.5” to last for whole day
- (3) Adjustable shelves
- Sliding doors
- Rubber seal between door and frame to prevent heat loss
- Vertical fluorescent lamp on both sides to better highlight food
- On/off switch for lamps
- Anti-slip rubber feet
- Heating indicator
- Attractive two-tone colour

- **Thermostats (if applicable) available in either Fahrenheit or Celsius**
- **Available in various electrical power setups (power setups available for all areas of the world)**
- **Power may vary based on specified electrical setup**

Hot Display Case

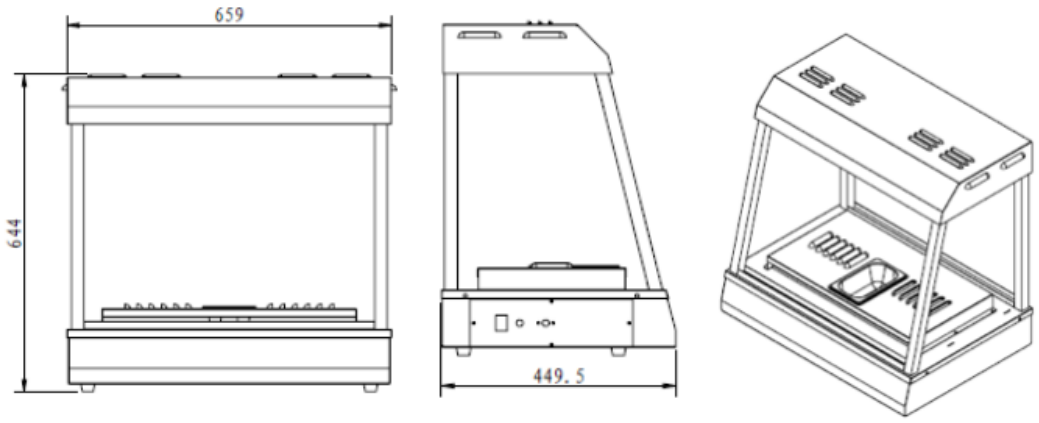

HDSHDN-26

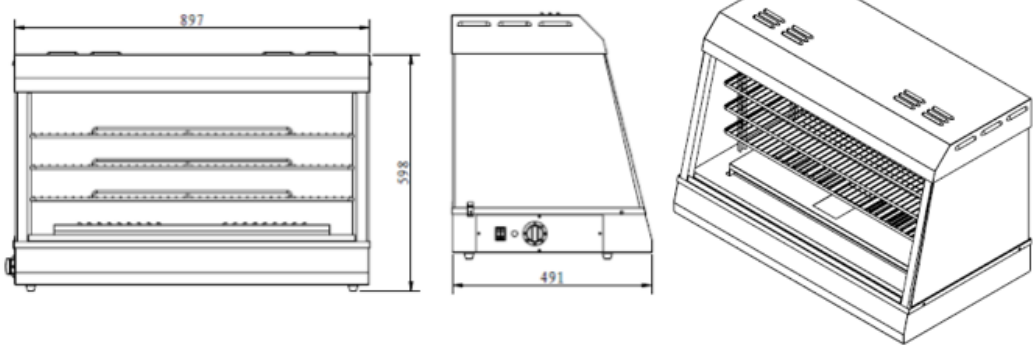

HDSHDN-36

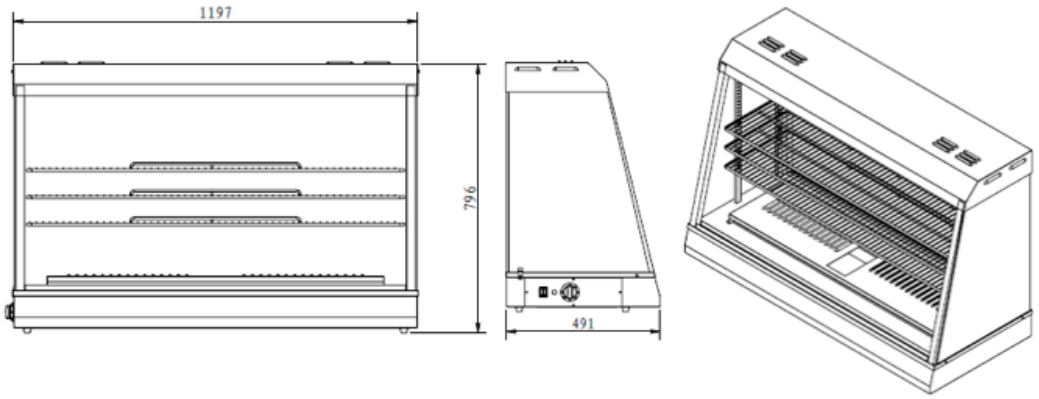

HDSHDN-48

MODEL	CAPACITY	POWER	SHELF SIZE	PRODUCT (WxDxH)	NW
HDSHDN-26	110 L	2840 W	580 x 275 mm / 23 x 11 inch 580 x 298 mm / 23 x 12 inch 580 x 318 mm / 23 x 13 inch	660 x 437 x 655 mm 26 x 17 x 26 inch	37 kg 81 lbs
HDSHDN-36	150 L	2840 W	820 x 315 mm / 32 x 12 inch 820 x 340 mm / 32 x 13 inch 820 x 360 mm / 32 x 14 inch	900 x 480 x 590 mm 35 x 19 x 23 inch	50 kg 110 lbs
HDSHDN-48	370 L	2840 W	1120 x 315 mm / 44 x 12 inch 1120 x 340 mm / 44 x 13 inch 1120 x 360 mm / 44 x 14 inch	1200 x 480 x 810 mm 47 x 19 x 32 inch	72 kg 158 lbs

sales@heavydutysystems.com

All electric cooking equipment is supplied with a cord and plug.

Electric Hob Cooker



HDSHG-08

STANDARD FEATURES

- All Stainless steel structure
- EGO1800W powerful infrared heater
- Glass ceramic tops for direct heat transfer
- Bakelite knob, cool to touch
- EGO infinite switch, easy to set power
- Power and heating indictors
- Compact design
- Round shape fits cookware better and makes best use of energy.
- Prompt glow-up time of 5 seconds
- Anti-slip rubber feet

- **Thermostats (if applicable) available in either Fahrenheit or Celsius**
- **Available in various electrical power setups (power setups available for all areas of the world)**
- **Power may vary based on specified electrical setup**

Electric Hob Cooker

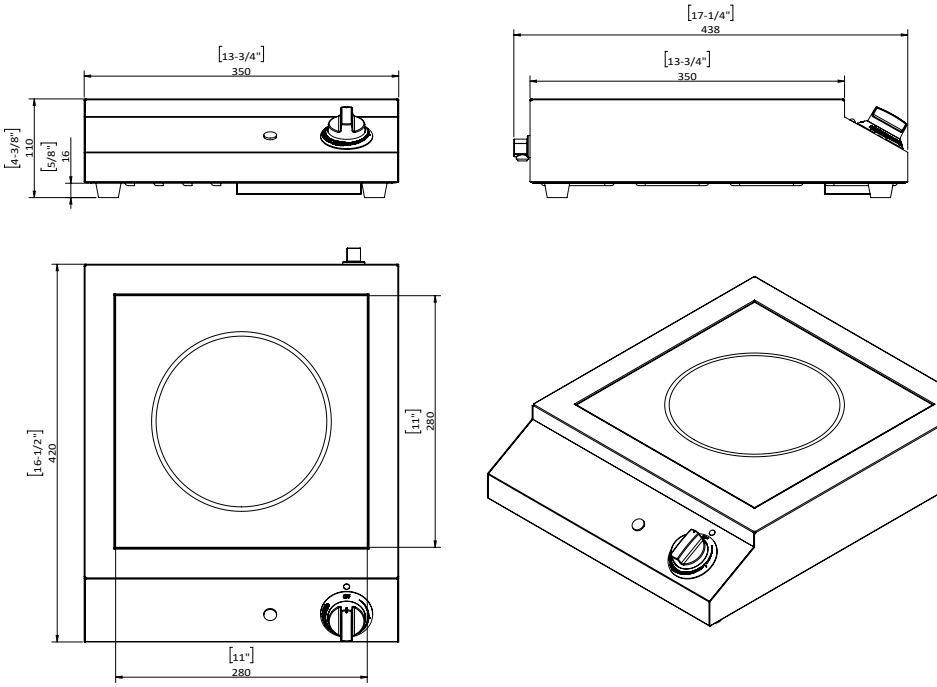

HDSHG-08

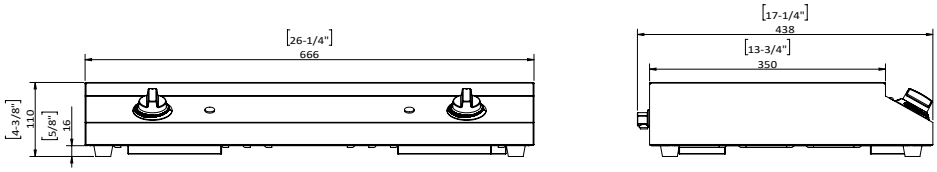

HDSHG-08-2

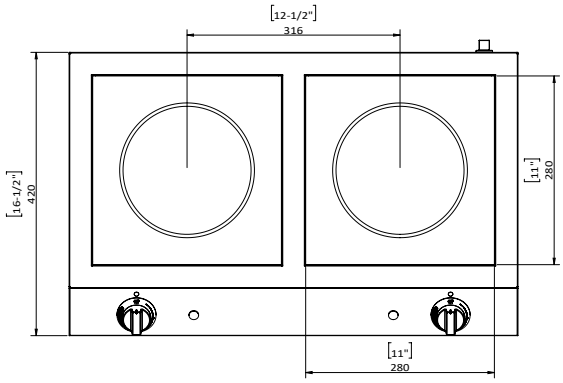

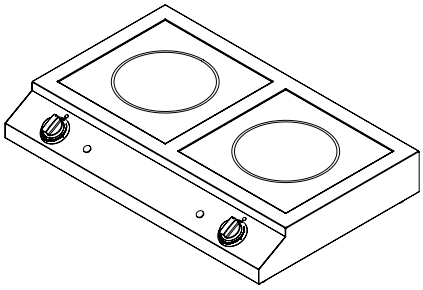

MODEL	PRODUCT (WxDxH)	GLASS SIZE	HEATING ZONE	POWER	NW
HDSHG-08	350 x 420 x 110 mm 14 x 17 x 4 inch	275 x 275 mm 11 x 11 inch	Dia. 200 mm Dia. 8 inch	1800 W	4.8 kg 11 lbs
HDSHG-08-2	666 x 420 x 110 mm 26 x 17 x 4 inch	500 x 275 mm 20 x 11 inch	Dia. 200 mm Dia. 8 inch	3600 W	8 kg 18 lbs

sales@heavydutysystems.com

All electric cooking equipment is supplied with a cord and plug.

Electric Crepe Maker



HDSECM-1



HDSECM-1A



HDSECM-2

STANDARD FEATURES

- All stainless steel structure
- Thermostat controlled, durable and robust
- Cast iron plate with Teflon coating
- Temperature range 30~300ºC (86°~572 °F)
- Special shape heating element for even heat distribution
- Two models come with warmer drawer
- Dia.400mm plate
- Anti-slippery rubber foot Power indicator
- Wooden crepe spreader
- Available in 3 different sizes

- **Thermostats (if applicable) available in either Fahrenheit or Celsius**
- **Available in various electrical power setups (power setups available for all areas of the world)**
- **Power may vary based on specified electrical setup**

Electric Crepe Maker

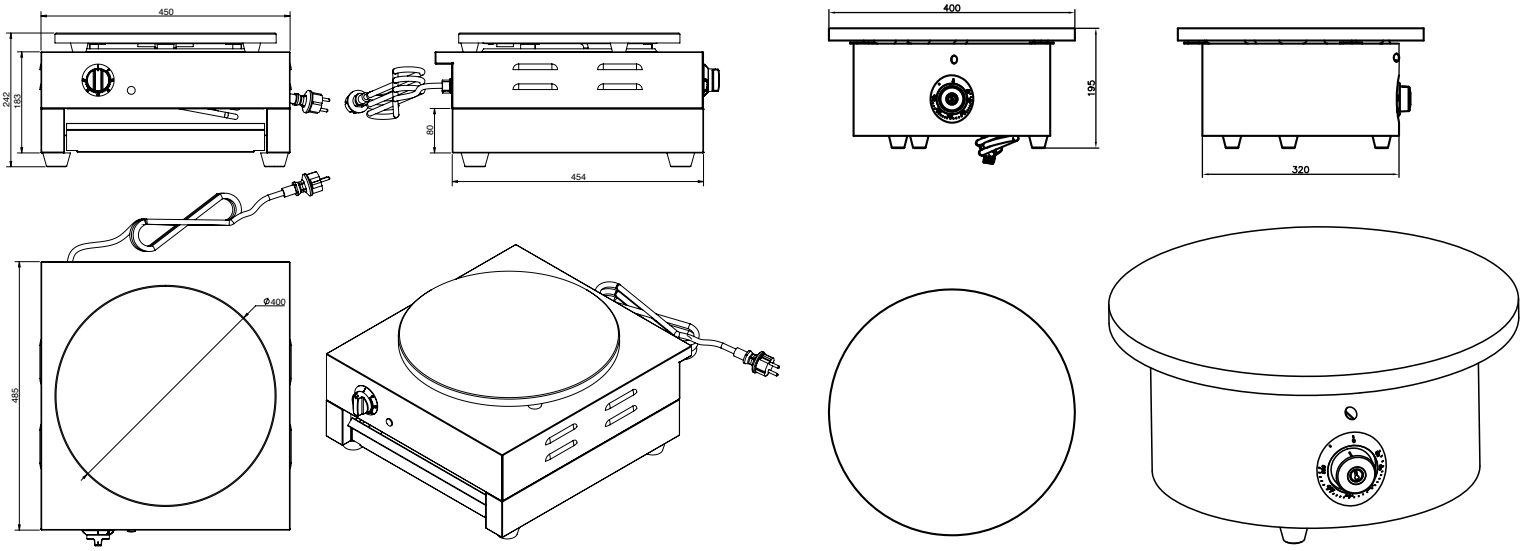

HDSECM-1

HDSECM-1A

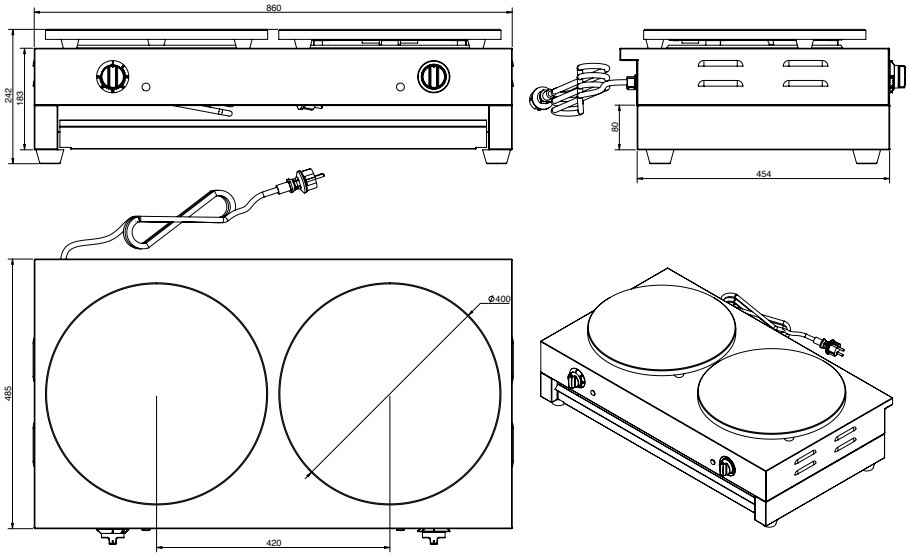

HDSECM-2

MODEL	BAKING PLATE	TEMPERATURE	POWER	PRODUCT (WxDxH)	NW
HDSECM-1	Dia. 400 mm Dia. 16 inch	30 - 300°C 86 - 572°F	3000 W	450 x 510 x 240 mm 18 x 20 x 9 inch	21.5 kg 47 lbs
HDSECM-2	Dia. 400 mm Dia. 16 inch	30 - 300°C 86 - 572°F	6000 W	870 x 510 x 240 mm 34 x 20 x 9 inch	40 kg 88 lbs
HDSECM-1A	Dia. 400 mm Dia. 16 inch	30 - 300°C 86 - 572°F	3000 W	Dia. 400 x H200 mm Dia. 16 x H8 inch	20 kg 44 lbs

sales@heavydutysystems.com

All electric cooking equipment is supplied with a cord and plug.

Electric Sauce / Topping Bottle Warmer



HDSBW-4

STANDARD FEATURES

- Perfect for keeping sauce warm and ready to use
- Stainless steel housing
- On/off power switch for each compartment
- 0.65L capacity bottle
- 200w heater for each compartment
- High limit protection
- Controls adjust between 105-185 °F (40-85 °C)

- **Thermostats (if applicable) available in either Fahrenheit or Celsius**
- **Available in various electrical power setups (power setups available for all areas of the world)**
- **Power may vary based on specified electrical setup**

Electric Sauce / Topping Bottle Warmer

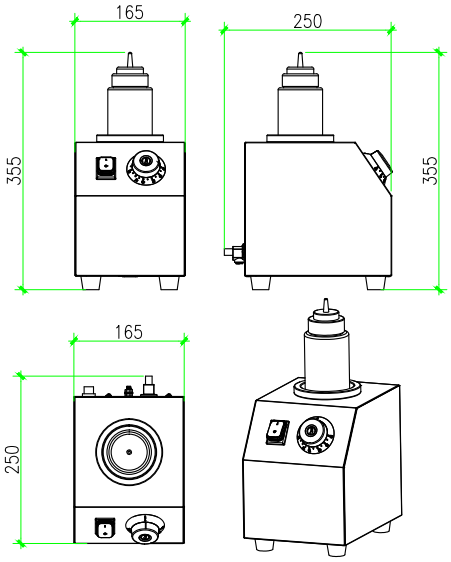

HDSBW-1

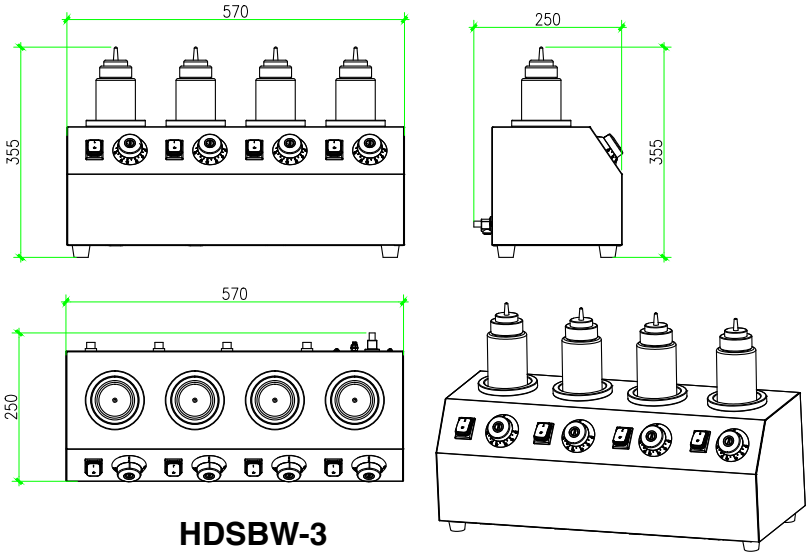

HDSBW-3

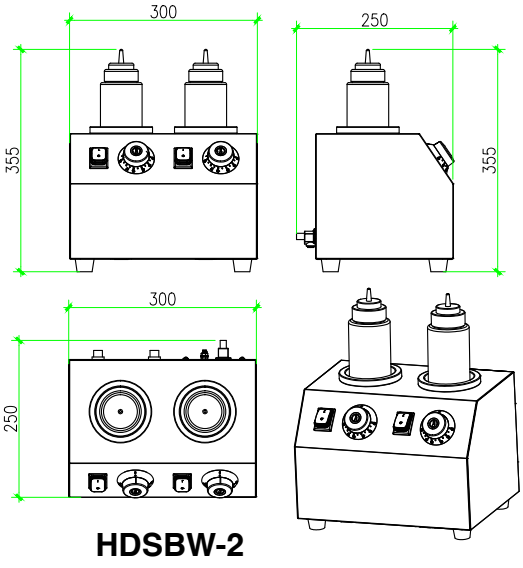

HDSBW-2

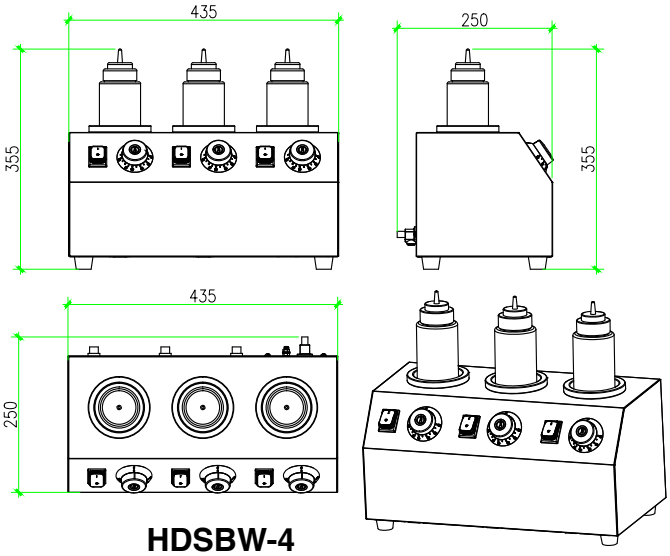

HDSBW-4

MODEL	POWER	PRODUCT (WxDxH)	COMPARTMENT	BOTTLE CAPACITY
HDSBW-1	200 W	165 x 250 x 355 mm 6.5 x 9.8 x 14 inch	1	650 ml
HDSBW-2	400 W	300 x 250 x 355 mm 11.8 x 9.8 x 14 inch	2	650 ml
HDSBW-3	600 W	435 x 250 x 355 mm 17 x 9.8 x 14 inch	3	650 ml
HDSBW-4	800 W	570 x 250 x 355 mm 22.4 x 9.8 x 14 inch	4	650 ml

sales@heavydutysystems.com

All electric cooking equipment is supplied with a cord and plug.

Hotdog Grill



HDSRG-05



Acrylic cover
optional for 5,7,9 rollers



1. Rotaty rolloers (5,7,9,11)
2. Housing
3. Fat tray
4. Feet
5. Wire grid
6. ON/OFF Switch for the rollers drive with integrated lamp (red)
7. Heating lamp for front rollers (orange)
8. Temperature knob for front rollers
9. Heating lamp for back rollers (orage)
10. Temperatire knob for back rollers

STANDARD FEATURES

- Stainless steel structure
- Stainless steel rollers
- Energy regulator controlled, durable and robust
- On/off switch for rotating of rollers
- Stainless steel heating elements
- Teflon grease stopper on roller ends
- Heavy duty geared-box motor with cooling fan
- Bottom grease collector
- Wire grid support inside collector pan to keep hotdog warm
- Anti-slippery rubber foot
- Available in 4 different sizes

- **Thermostats (if applicable) available in either Fahrenheit or Celsius**
- **Available in various electrical power setups (power setups available for all areas of the world)**
- **Power may vary based on specified electrical setup**

Hotdog Grill

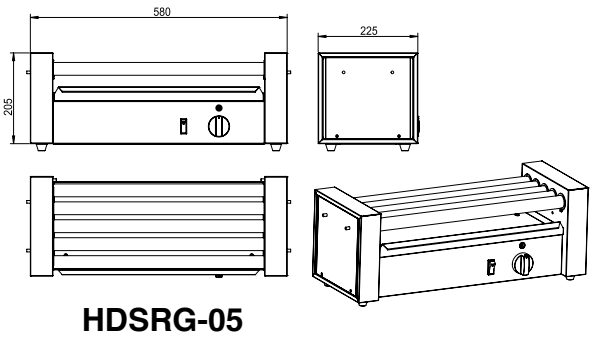

HDSRG-05

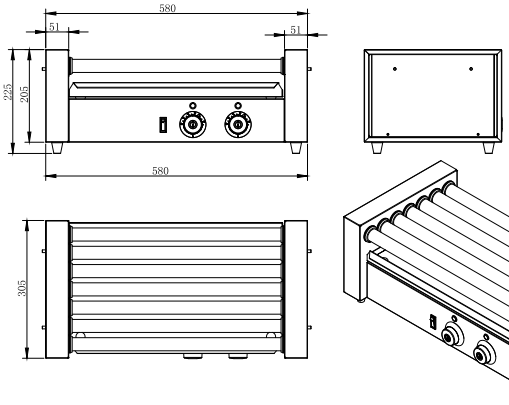

HDSRG-07

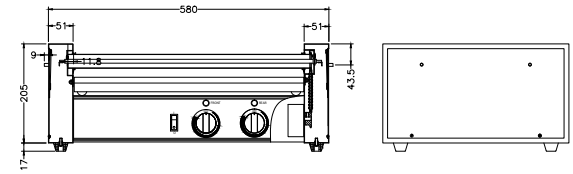

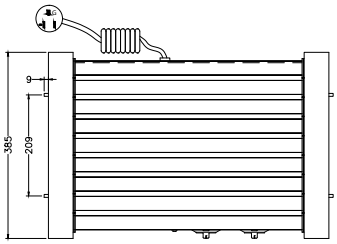

HDSRG-09

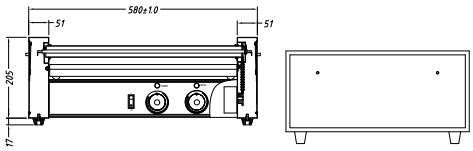

HDSRG-11

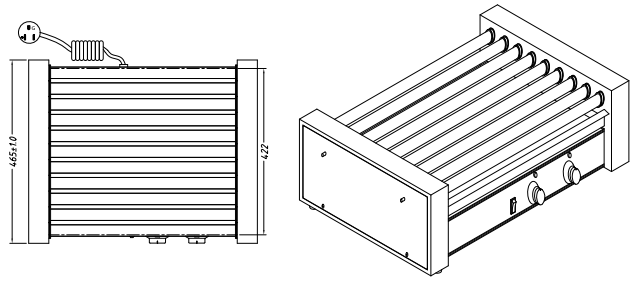

MODEL	POWER	PRODUCT (WxDxH)	ROLLER QTYS	NW
HDSRG-05	400 W	590 x 225 x 255 mm 23.2 x 8.9 x 10 inch	5	10 Kg 22 lbs
HDSRG-05C		Optional Cover for HDSRG-05		
HDSRG-07	560 W	590 x 330 x 255 mm 23.2 x13 x 10 inch	7	13 Kg 29 lbs
HDSRG-07C		Optional Cover for HDSRG-07		
HDSRG-09	720 W	590 x 405 x 255 mm 23.2 x 15.9 x 10 inch	9	15 Kg 33 lbs
HDSRG-09C		Optional Cover for HDSRG-09		
HDSRG-11	880 W	590 x 480 x 255 mm 23.2 x18.9 x 10 inch	11	17 Kg 37 lbs

sales@heavydutysystems.com

All electric cooking equipment is supplied with a cord and plug.

Cup Warmer



HDSCW-72

STANDARD FEATURES

- All stainless steel structure
- Stainless steel heating elements
- On/off power switch with illuminator
- Temperature range 30-60ºC (86-140ºF)
- Top storage area with steel rails around to prevent cups falling
- Perfect for warming cups, plates
- Special shape heating element for even heat distribution
- Warming capacity comes total 72 cups
- Two separate storage levels

- **Thermostats (if applicable) available in either Fahrenheit or Celsius**
- **Available in various electrical power setups (power setups available for all areas of the world)**
- **Power may vary based on specified electrical setup**

Cup Warmer

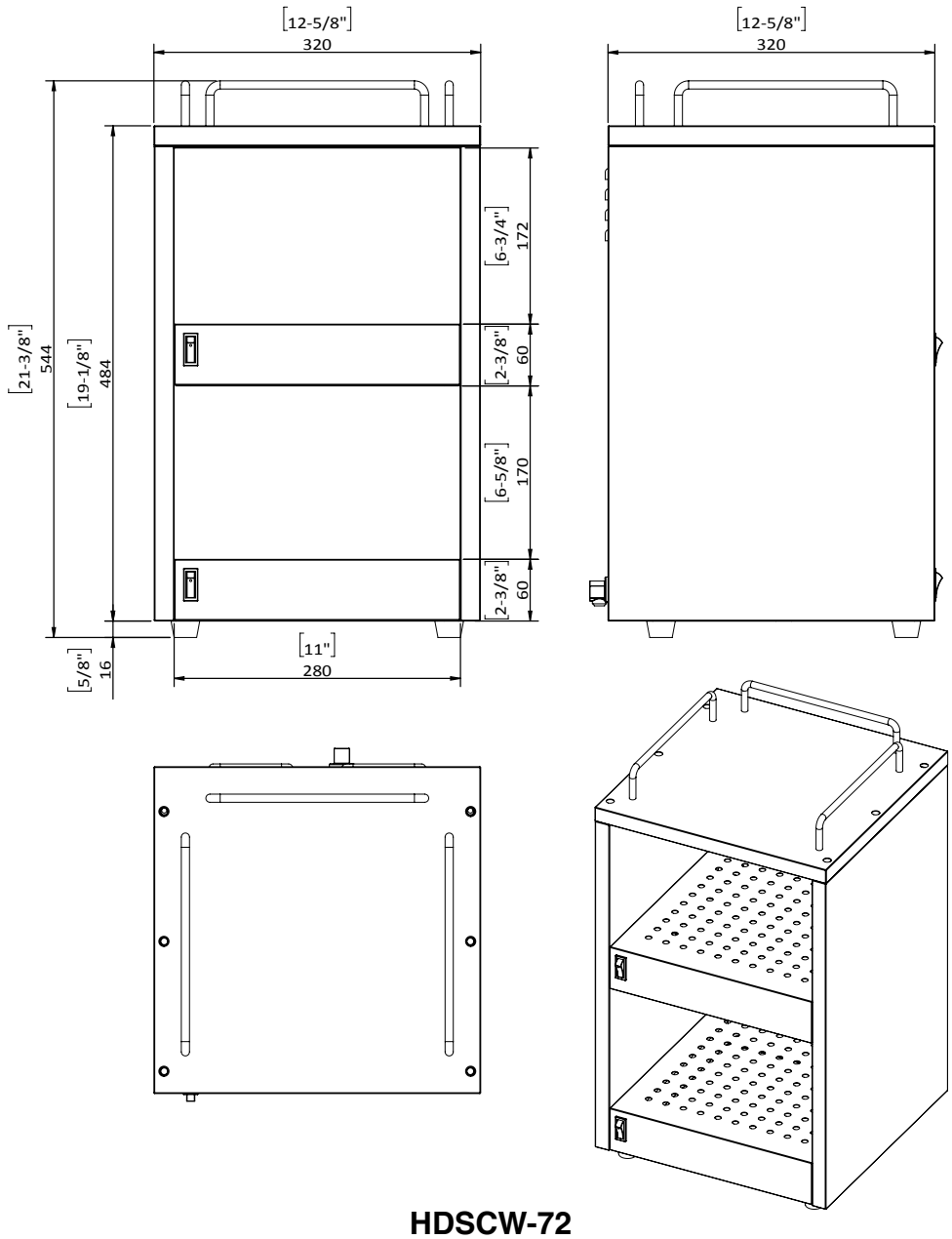

HDSCW-72

MODEL	PRODUCT (WxDxH)	CAPACITY	TEMPERATURE	POWER	NW
HDSCW-72	320 x 320 x 544 mm 12.6 x 12.6 x 21.4 in	72	30 - 60°C 86 - 140°F	140 W	11.5 kg 25 lbs

sales@heavydutysystems.com

All electric cooking equipment is supplied with a cord and plug.

Bain Marie



HDSSBM-6

STANDARD FEATURES

- Stainless steel heater immersed in water to improve efficiency
- Stainless steel structure, Stainless steel bottom shelf for easy storage
- Thermostat controlled, durable and robust
- Float switch to prevent dry heating
- 150mm depth GN1/1 stainless steel inner pan
- Comes with S/S GN pan cover
- EGO 85 °C (185 °F) thermostat. Foods to be served at 60~63 °C (140-145 °F)
- Dismantled stand to save shipping volume
- Sliding rails on both sides can be folded
- Heating and power indicators
- Available in 4 and 6 pans

- **Thermostats (if applicable) available in either Fahrenheit or Celsius**
- **Available in various electrical power setups (power setups available for all areas of the world)**
- **Power may vary based on specified electrical setup**

Bain Marie

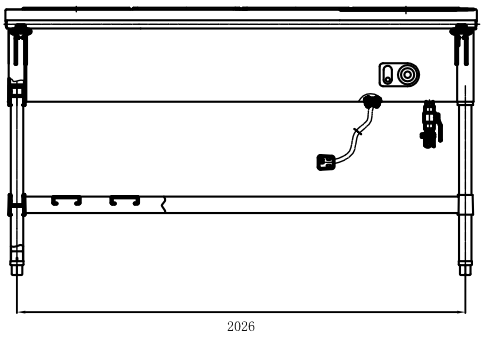

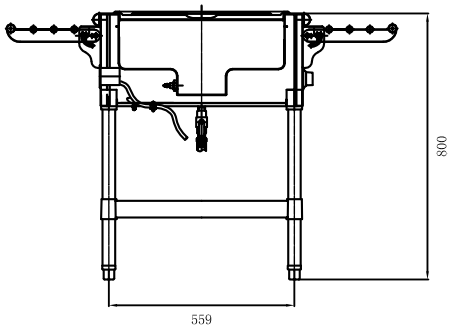

HDSSBM-6

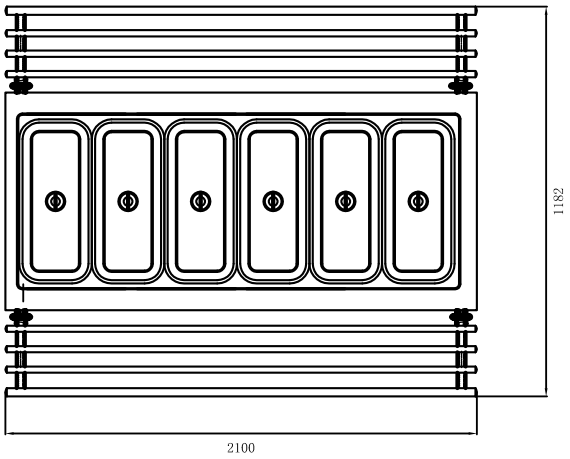

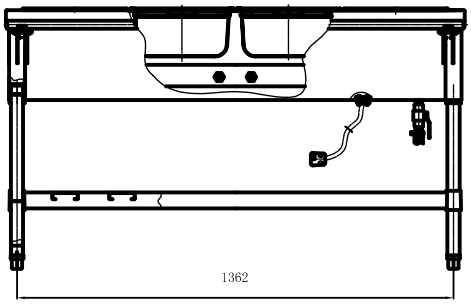

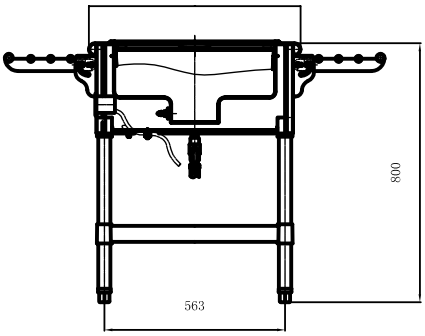

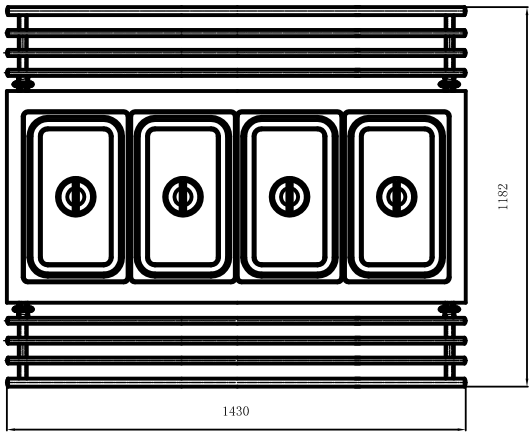

HDSSBM-4

MODEL	PRODUCT (WxDxH)	TAP	WELL DEPTH	POWER	NW
HDSSBM-4	1430 x 1182 x 800 mm 56 x 47 x 32 inch	Yes	150 mm 6 inch	2000 W	57 kg 125 lbs
HDSSBM-6	2100 x 1182 x 800 mm 83 x 47 x 32 inch	Yes	150 mm 6 inch	2000 W	79 kg 174 lbs

sales@heavydutysystems.com

All electric cooking equipment is supplied with a cord and plug.

Drop-in Plate Warmer



HDSPW-40

STANDARD FEATURES

- All stainless steel structure
- On/off power switch
- Temperature range 30-85ºC (86-185ºF)
- Adjustable plate guiding rail to suite different sizes of plates
- Double walled construction reduces heat loss
- Stainless steel heating element
- Drop-in design
- Adjustable spring tension for loading different quantity

- **Thermostats (if applicable) available in either Fahrenheit or Celsius**
- **Available in various electrical power setups (power setups available for all areas of the world)**
- **Power may vary based on specified electrical setup**

Drop-in Plate Warmer

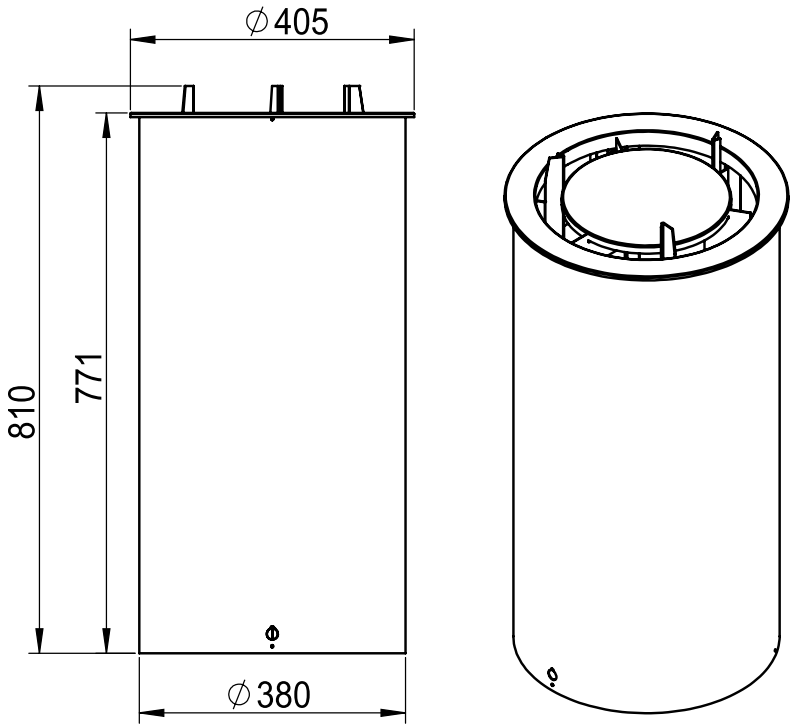

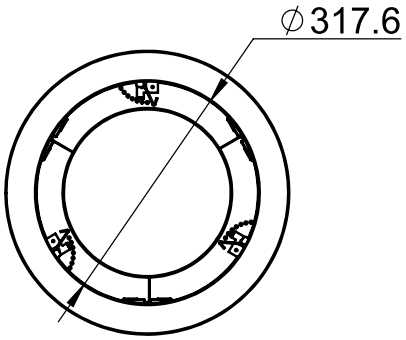

HDSPW-40

MODEL	PRODUCT (Dia x H)	CAPACITY	PLATE SIZE	POWER	NW
HDSPW-40	Dia. 405 x H. 810 mm Dia. 15.9 x H. 31.9 in	40	Max dia 300 mm Max dia 12 in	400 W	19 kg 42 lbs

sales@heavydutysystems.com

All electric cooking equipment is supplied with a cord and plug.

Plate Warmer



HDSPWS-40



HDSPWS-40-2

STANDARD FEATURES

- All stainless steel structure
- Thermostat controlled, durable and robust
- On/off power switch
- Temperature range 30-85ºC (86-185ºF)
- Adjustable plate guiding rail to suite different sizes of plate
- Double walled construction reduces heat loss
- Stainless steel heating element
- Cool-to-touch Bakelite handle
- Adjustable spring tension for loading different quantity
- Four swivel castors with brake
- Optional black cover

- **Thermostats (if applicable) available in either Fahrenheit or Celsius**
- **Available in various electrical power setups (power setups available for all areas of the world)**
- **Power may vary based on specified electrical setup**

Plate Warmer

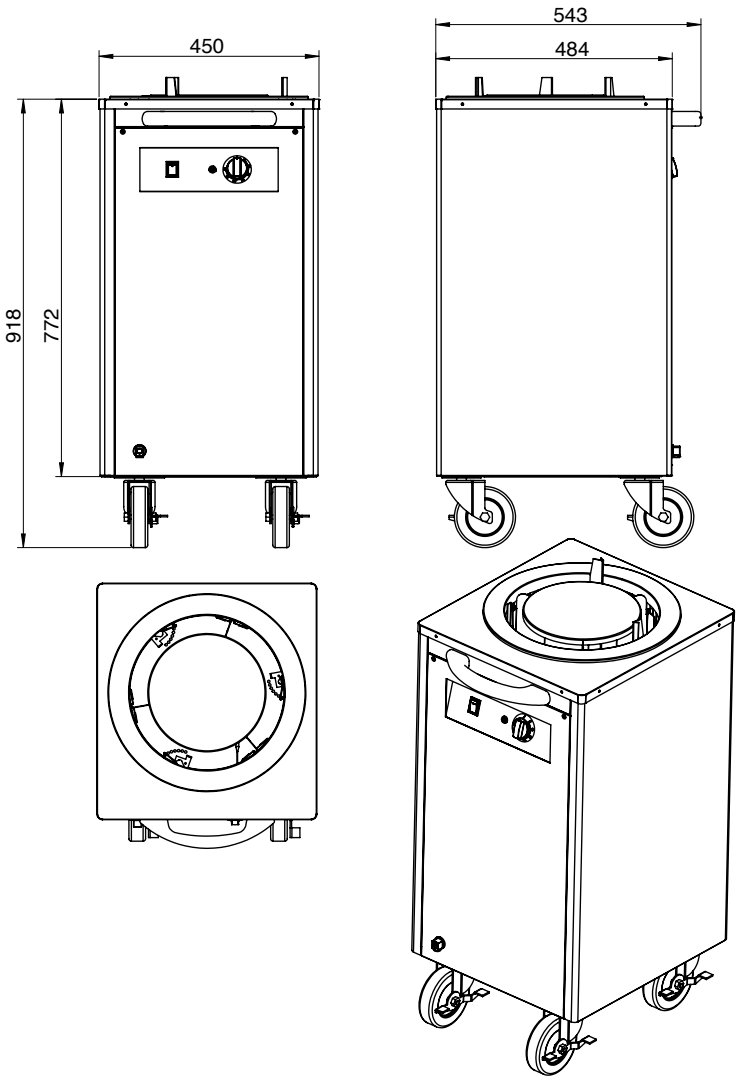

HDSPWS-40

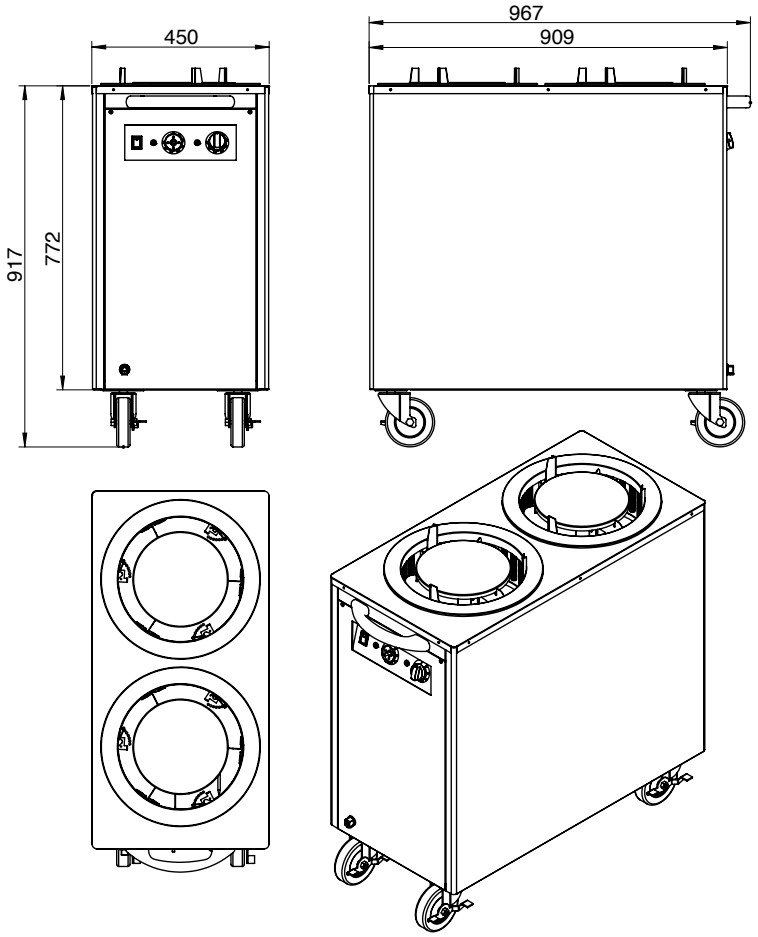

HDSPWS-40-2

MODEL	PRODUCT (WxDxH)	CAPACITY	PLATE SIZE	POWER	NW
HDSPWS-40	450 x 485 x 770 mm 18 x 19 x 30 inch	40	Max dia 300 mm Max dia 12 inch	400 W	31 kg 68 lbs
HDSPWS-40-2	450 x 910 x 770 mm 18 x 36 x 30 inch	2 x 40	Max dia 300 mm Max dia 12 inch	800 W	48 kg 106 lbs

sales@heavydutysystems.com

All electric cooking equipment is supplied with a cord and plug.

Plate Warmer



HDSPWSC-40



HDSPWSC-40-2

STANDARD FEATURES

- All stainless steel structure
- Thermostat controlled, durable and robust
- On/off power switch
- Temperature range 30-85ºC (86-185ºF)
- Adjustable plate guiding rail to suite different sizes of plates
- Convection design to reduce pre-heating time
- Stainless steel heating element
- Cool-to-touch Bakelite handle
- Adjustable spring tension for loading different quantity
- Four swivel castors with brake
- Optional black cover

- **Thermostats (if applicable) available in either Fahrenheit or Celsius**
- **Available in various electrical power setups (power setups available for all areas of the world)**
- **Power may vary based on specified electrical setup**

Plate Warmer

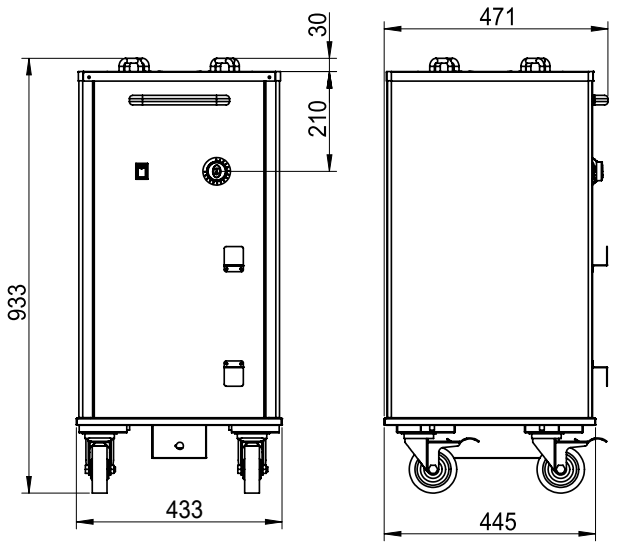

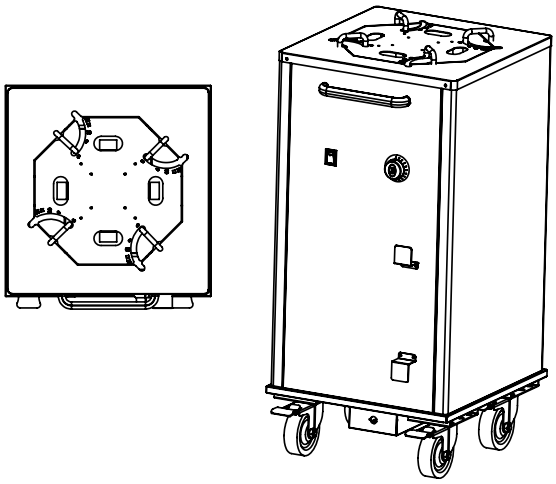

HDSPWSC-40

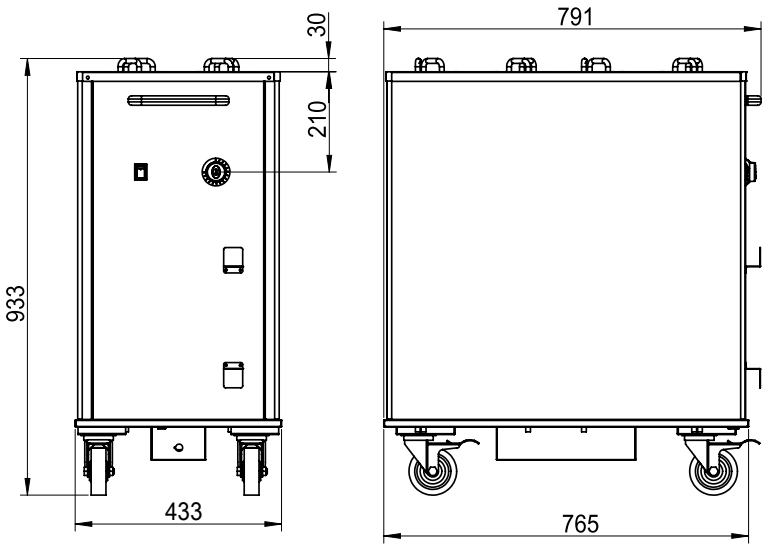

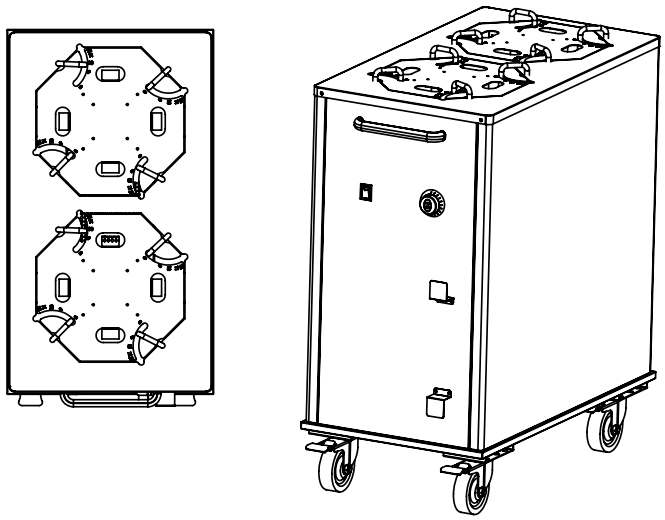

HDSPWSC-40-2

MODEL	PRODUCT (WxDxH)	CAPACITY	PLATE SIZE	POWER	NW
HDSPWSC-40	435 x 520 x 1025 mm 17 x 21 x 40 inch	40	Max dia 300 mm Max dia 12 inch	1000 W	28 kg 62 lbs
HDSPWSC-40-2	435 x 815 x 1025 mm 17 x 32 x 40 inch	2 x 40	Max dia 300 mm Max dia 12 inch	2000 W	43.5 kg 96 lbs

sales@heavydutysystems.com

All electric cooking equipment is supplied with a cord and plug.



PERFORMANCE. DURABILITY. VALUE.

sales@heavydutysystems.com

www.heavydutysystems.com