Undercounter Refrigerator

HDSUCR-1S-27

HDSUCR-2S-47 / HDSUCR-2S-60

HDSUCR-3S-72

STANDARD FEATURES

- Stainless steel exterior, stainless steel interior, aluminum back.
- Refrigeration system keeps food at safe temperatures between 33ºF and 41ºF (0.5ºC to 5ºC).
- Self-Closing doors with 90 degree stay-open feature.
- Shelves: Adjustable heavy-duty PVC coated shelves.
- Option of Backsplashes available.
- Preinstalled 4” heavy-duty casters with brakes.
- Electronic control system makes it easy to adjust temperature set point and defrost frequency.
- Slide out refrigeration condensing unit makes it easy to access condenser for cleaning and service.
- Option of different handles available.
- These units use HYDRO-CARBON R290 refrigerant, which is environmentally friendly and more efficient than R134a/R404a refrigerant.

REFRIGERATION

Undercounter Refrigerator

HDSUCR/F-1S-27

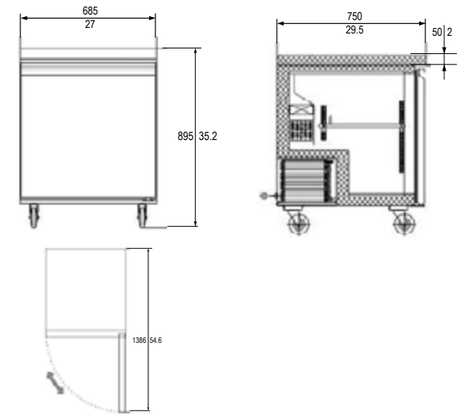

HDSUCR/F-2S-47

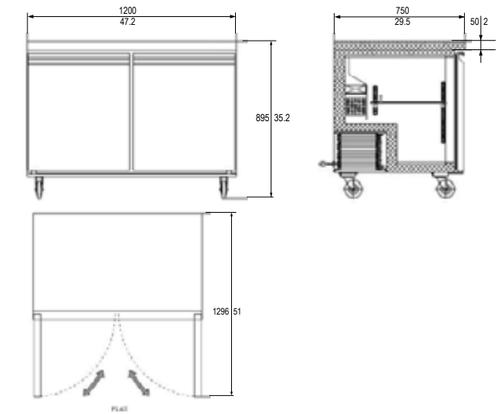

HDSUCR/F-2S-60

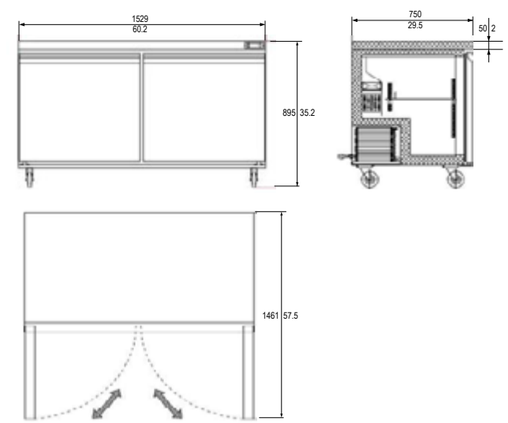

HDSUCR-3S-72

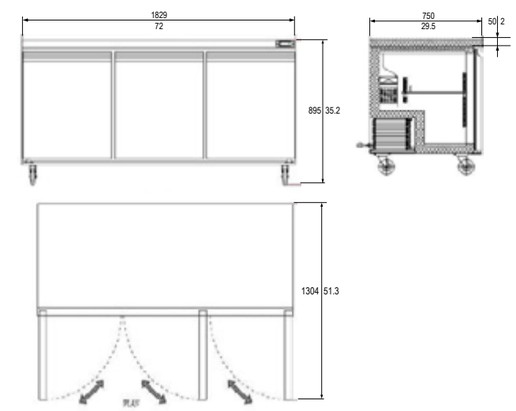

MODEL	DOORS	SHELVES	DIMENSIONS	CAPACITY	HP	AMPS	VOLTAGE	PLUG TYPE
HDSUCR-1S-27	1	1	27 x 29 1/2 x 35 1/5 in 685 x 750 x 895 mm	6.3 cu.ft. 177 liters	1/6	1.9	115/60/1	NEMA 5-15P
HDSUCR-2S-47	2	2	47 1/5 x 29 1/2 x 35 1/5 in 1200 x 750 x 895 mm	12 cu.ft. 338 liters	1/5	2.7	115/60/1	NEMA 5-15P
HDSUCR-2S-60	2	2	60 1/5 x 29 1/2 x 35 1/5 in 1526 x 750 x 895 mm	15 cu.ft. 428 liters	1/5	2.9	115/60/1	NEMA 5-15P
HDSUCR-3S-72	3	3	72 x 29 1/2 x 35 1/5 in 1829 x 750 x 895 mm	15.5 cu.ft. 440 liters	1/5	3.2	115/60/1	NEMA 5-15P

sales@heavydutysystems.com

Voltage 220/50/1 available.